EDITORIAL

THOSE Chicago men that were trying to get whiskey on prescriptions purporting to be signed by a physician long since passed away might be said to be running it into the ground.

SEA-GOING ships built in American yards and officially numbered during August had a total tonnage of 232,628, approximately the same as the monthly average since the first of the year. Wooden shipbuilding has become almost negligible as far as sea-going craft are concerned, only six vessels of a total tonnage of 8318 being launched during August.

MEXICO is an important market for the metal-trades plants of the Pacific Coast, and, were order to be completely restored, would be a very important one. For this reason, we are glad to have the opportunity of publishing in this issue an article by an American engineer whose long period of residence in various parts of Mexico entitles him to speak with authority.

EFFORTS to organize the mills of the United States Steel Corporation have been postponed, as a result of a meeting attended by the Executive Committee of the American Federation of Labor and the heads of international unions in the steel industry, where the formation of a committee to take charge of these activities was postponed until after election. This means that there will be no active struggle before spring, if then.

THE Pittsburgh basing-point for steel prices is to be again the subject of inquiry by the Federal Trade Commission, hearings to commence in November. Most of the steel industry had supposed that the inquiry last summer had been completed, and that the decision practically endorsing the Pittsburgh base was final. This apparently is not the case, although the reasons for reopening the investigation have not been announced up to the present time.

JAMES HARTNESS, president of the Jones & Lamson Machine Co., has received the Republican nomination for Governor of Vermont. The Republican nomination in Vermont is not quite the equal of the Democratic nomination in Mississippi, but it is a fairly close second, so we presume that Mr. Hartness will be elected. Many State governors have been machine politicians in the ordinary sense of the term, but a machine politician of Mr. Hartness' type is a little unusual. Mr. Hartness made his campaign mainly on the importance to the State of industrial development, a matter of particular importance in such a State as Vermont, but none the less important in the States of the Pacific Coast, even though they are possessed of greater agricultural and mineral resources. How would it do, for instance, to run a metal-trades man for Governor of California in 1922? Nominations are in order.

AMERICAN shippers that are disposed to grumble at the recent increase in freight-rates would do well to compare notes with their British brothers. British rates have throughout recent years been higher than American, and on top of this come increases of which the following are typical: coal, 100% plus a flat rate of 6 pence per ton; minerals and merchandise, 100% plus a flat rate ranging from 6 pence to 3 shillings per ton. It is further provided that any tolls, rates, and charges in effect on January 14, 1920, and not elsewhere specified, be increased 100%.

THE story of the Texas judge who decided that "It ain't no crime to kill a Chinaman' is familiar to us all. The student of police-court records in the Bay district might well have reason to believe that 'it ain't no crime to beat up a non-union man'. Recently, however, a man that acted on this principle and attacked a non-union molder employed at the Metal Trades Foundry at Alameda, has been convicted and sentenced. We trust ultimately the principle may be accepted that everyone, even a non-union man, is entitled to the protection of the laws of the land.

THOMAS JEFFERSON is said to have been considerably embarrassed after taking the Presidential office by the over-zealous desire of his political supporters to serve their country and get on the public payroll. This was before the days of civil-service laws, but neither had the simple expedient of 'turning the rascals out' been developed. Speaking of the men then in office to a delegation of would-be patriots, he said plaintively, "Few die, and none resign." The civil-service laws have aggravated the difficulty of separating the public servant from his job. Men and women in various stages of senility have been retained in clerkships long after they became incapable of doing even part of a day's work. This was largely because the department-head recognized that dismissal meant virtually sending them to the poorhouse. Recently-enacted legislation, however, provided for compulsory retirement on a pension after reaching a certain age, and over four thousand Government employees have since been retired. How useless some of them had become is indicated by the fact that in many instances no successors have been appointed to do their work, for the simple reason that there was none to do.

Generated on 2024-09-30 02:07 GMT / https://hdl.handle.net/2027/uiug.30112007837690
Public Domain, Google-digitized / http://www.hathitrust.org/access_use#pd-google
Digitized by Google
Original from UNIVERSITY OF ILLINOIS AT URBANA-CHAMPAIGN

Shipyard Fraud Cases Dismissed

Immediately following the return of a verdict of not guilty in the cases involving officials of the Grays Harbor Motorship Corporation together with certain war-time officials of the Emergency Fleet Corporation, the Department of Justice moved to dismiss all shipyard fraud cases in the North-West district. The indictments in these cases were returned by a Federal grand jury last winter, as a result of an investigation made by Department of Justice agents. The newspapers were full of headlines regarding 'billion dollar frauds', and the total amount involved in all the indictments actually did reach several millions, but the whole affair has 'petered out'.

Another Bonehead Play

Last spring, the astonishing news came that the New York legislature had, by a large majority, voted to expel five of its duly-elected members for the crime of being Socialists. These men have since been re-elected by their several constituencies, and the members of the legislature, who apparently have learned nothing in the meantime, voted to expel three of them, whereupon the other two, very properly, tendered their resignations. There is one encouraging feature, however. The majority in favor of expulsion was not nearly so large this time as it was before. As far as we can learn, no evidence of importance was introduced at this investigation that was not submitted at the earlier hearing. We never had much use for the Socialist party, and its war record was disgraceful, while some of its members are now very properly serving sentences. But the flights of the imagination by which every Socialist is held to be a person plotting to overthrow the Government, by force, and, as such, is not to be allowed in that immaculate body, the New York State legislature, are absurd.

Census Returns

The Constitution of the United States provides that two sets of thrills be provided at regular intervals for the American people. First of course is the great National game, a Presidential election. Next comes the census. When, as in the present year, they arrive together, we are indeed fortunate. Podunk Falls learns with joy of an increase of 50%, and feels that at last its hated rival, Shelby Centre, has been distanced hopelessly. However, the city directory, the school census, and, particularly, the housing shortage cause the Podunkers to be convinced that something is wrong, and that the actual gain must be at least 75%. What is it that makes the residents of metropolis and small town alike imitate the pouter pigeon and take special pride in mere size? And why does the man that complains bitterly of the high cost of food rejoice when he learns that his city is growing rapidly, more rapidly than the country districts surrounding it? The number of people living in a town is interesting. What is more important, however, is whether or not the town is a good place in which to live.

Make the Freight-Car Work

Although transportation conditions are growing better, there is still a great deal of room for improvement. The accomplishment of this improvement is something that the railroad official cannot do alone, but which must be shared by the shippers as well. This is particularly true with regard to freight-cars. Estimates of the number of new cars that could be used to advantage run as high as 535,000. This is far beyond the capacity of the car-shops of the country, and even if the shops could make them, where would the railroads borrow the money to pay for them? Furthermore, the cost of any cars that are built must ultimately be paid by the shipper. The logical thing is to build some cars, perhaps build as many as can reasonably be built, and to rely for the remainder of the needed relief on more efficient use of the cars now in service. Statistics show that 37% of the time of the average car is spent in the hands of shipper or receiver. Surely this proportion can be reduced so that quicker trips and more mileage per year can be obtained. Again, the average freight-car is loaded to about two-thirds capacity. If this proportion were raised only to three-fourths, not an unreasonable increase in view of the fact that many cars can be, and are, loaded above capacity, eight cars could do the work that nine are doing now. Furthermore, careless loading causes an increase in the number of bad-order cars, a number which is far above the average at the present time.

Golden Eggs—and Geese

Our contemporary, 'The California Shipbuilder and Metalworker', states that a certain union organizer, in speaking of the president of a local metal-trades concern, who is moving has plant away from San Francisco, said: "We have run that ——— ——— out of town, and we will run several others out before we get through with them." Even with the authority quoted, we would find it hard to believe the story, if it did not describe only too well the attitude of a certain type of union man, an attitude that is doing more harm to respectable organized labor than anything we could name. Here is a man that maintains an open shop, it is true, but one in which wages and working conditions are good, and the only thought of the agitator is to drive him and his establishment out of town. This reduces the number of jobs available in the city in the crafts affected, which, in turn, reduces the number of men living here, reduces the amount of money the storekeepers have to spend, reduces the demand for products of local metal-trades concerns, and so the vicious circle continues indefinitely. How can anything but harm come to employer, employees, or the public as a result of such tactics?

Generated on 2024-09-30 02:12 GMT / https://hdl.handle.net/2027/uiug.30112007837690
Public Domain, Google-digitized / http://www.hathitrust.org/access_use#pd-google
Digitized by Google
Original from UNIVERSITY OF ILLINOIS AT URBANA-CHAMPAIGN

Some Foolish Reactionaries

The Better America Federation, which we understand is an outgrowth of the Commercial Federation of California, has skipped the track. In a publication recently issued concerning industrial relations, the Federation takes a fling at the Child Labor Law, compulsory education up to the age of 16, and several other measures that have practically passed beyond the realm of controversy, on the Pacific Coast at least. The argument on compulsory education is typical. "The period of compulsory education should not extend beyond 14 years of age. The vast majority of children finish the eighth grade at the end of their fourteenth year." (A direct misstatement of fact.) "Unless they are intending to follow some vocation, requiring a superior education, there is no practical wisdom in extending their school period by compulsion beyond that. As a matter of fact it is unwise, and results frequently in a handicap rather than an advantage in their future advance." In other words, let us select certain children to be hewers of wood and drawers of water, and let us not waste too much education on them, because it might make them discontented and disarrange our carefully arranged class organization of society. That may be the proper system for 'Better America', but it is not in accord with either present or past American ideals. They tried that kind of a system in Russia for a good many hundred years, and look what happened. The manifesto of the Better America Federation is one of the best pieces of Bolshevik propaganda that we have seen for a long time. Many of the objects of the Federation are praiseworthy and the majority of its members are well-meaning, which makes it particularly unfortunate that they have allowed control of the organization to fall into the hands of reactionaries, and stupid reactionaries at that.

Italian Soviet Experiment

News of the National political campaign and the equally National baseball season has crowded off the front page and out of public attention an interesting economic experiment that is being tried in Italy. About the beginning of September many Italian labor unions attempted a new kind of general strike. In place of refusing to work, they marched on the big industrial plants, such as that of the Fiat company, drove out the owners and took possession. Even the cash on hand in company safes was 'confiscated'. Whether from sympathy with the strikers, or because of a belief that the movement, if given enough rope, would hang itself, the Government ignored the pleas of the plant-owners for protection. So the workers were given a free hand in the operation of the plants on a communistic basis. With raw material on hand, as well as a fair amount of cash to pay wages, the first few days did not go so badly. Pretty soon, however, a succession of snags appeared in the path of the communists. Buyers were chary about accepting products that might ultimately be adjudged to be stolen goods. Banks refused credit for the same reason. With no money coming in, there was soon none available for wages. To add to their troubles, dealers in materials required to replace diminishing stocks developed that awkward habit, known only too well to most of us, of making C. O. D. shipments. The latest news from the industrial districts is that the owners of many plants are resuming charge of them, at the request of the workers, who have had enough communism. Some changes have been made in wages and working conditions, but, in general, the old order has been restored. It is quite likely that the capitalistic system will have been restored in the remaining factories by the time this issue reaches our readers.

Marine Diesel Progress

A recent article in 'Motorship' tells of the arrival in New York of the German tanker 'Zoppot', the largest motorship in the world. This vessel had been completed at the Krupp yards just before War was declared, but was laid up until the cessation of hostilities. A number of changes were then made, particularly in the engine design, and the vessel placed in commission. She has a dead-weight capacity of 16,800 tons. There are two Krupp two-cycle six-cylinder single-acting Diesel engines of 2000 indicated horse-power each. On the trip across the Atlantic an average speed of 11½ knots was maintained. The same issue also mentions the completion at the Krupp plant of a 12,000-hp. six-cylinder double-acting two-cycle Diesel engine, which is to be installed in a merchant vessel.

State of the Nation

Information regarding the man that sent out the first questionnaire is lost in the mazes of antiquity, although the habit did not really get a hold on the American people until the War. Among the few questionnaires that are worth appreciably more than the paper on which they are printed, the one recently undertaken by the Fidelity & Deposit Co. of Maryland is entitled to a prominent place. The men returning the answers were good observers and their conclusions regarding business and other conditions are valuable. It is interesting to note that conditions on the Pacific Coast appear, in general, to be as good or better than in the rest of the country. Thus while several regions report building operations as decreasing, they are still increasing here. This region is also the only one reporting a decided increase in the efficiency of labor. In common with the rest of the country, no important shortage of labor or of employment is noted. Throughout the country most wholesalers and retailers regard the prospects for fall and winter as good, but elsewhere than on the Pacific Coast there is a tendency to qualify this statement. As in most other regions, manufacturing plants still have plenty of orders and whatever shortage of raw materials exists is insufficient to curtail production. Everywhere

Generated on 2024-09-30 02:09 GMT / https://hdl.handle.net/2027/uiug.30112007837690
Public Domain, Google-digitized / http://www.hathitrust.org/access_use#pd-google
Digitized by Google
Original from UNIVERSITY OF ILLINOIS AT URBANA-CHAMPAIGN

shortage of freight-cars is being reduced and general transportation conditions are improving. Unlike several other regions, industrial concerns here are not carrying much of their customers' paper. Discounting of bills by industrial concerns is reported everywhere but in the west south central States. Everywhere the farmers are reported prosperous and as having plenty of funds from the sale of this year's crops. Throughout the country the banks are well-supplied with funds, which they are able to loan satisfactorily, in spite of relatively high rates of interest. Deposits are increasing on the Pacific Coast, although some other regions report them as either stationary or decreasing.

Has the Toboggan Started?

Mr. Henry Ford has again appeared in his favorite role of the *enfant terrible* of American industry. Six years ago he startled us all, particularly his fellow-employers, by increasing wages to what were then unprecedented figures. This was followed some months later by a large reduction in prices of finished cars. The War in Europe had not yet begun to affect materially the course of prices, but that development soon followed, and the price of flivvers climbed, like the price of the other necessaries of life, although not in the same proportion. Now Mr. Ford has upset the apple-cart again by announcing a 'return to pre-war prices', or rather to the lowest prices, established after the outbreak of the War, and some time before we entered the struggle. It might be noted here that while the price received by the Ford company is the same as that received under the 'pre-war' schedule, even the Detroit citizen will have a war tax to pay that was not in effect in the days that are no more, while the purchaser living at a distance will be reminded that freight-rates are not what they used to be. Even Mr. Ford cannot bring us back to pre-war conditions all at once.

For some time it has been generally known that conditions in the automobile business were not entirely satisfactory to the manufacturers. The tremendous demand that followed the Armistice and the return of the factories from war-work to ordinary production has been satisfied, while the gasoline shortage of last summer and the alarmist views expressed in certain quarters regarding the future supply have had their effect. To be sure, Mr. Ford states that his company has unfilled orders for nearly 150,000 machines, and there is no reason to doubt his veracity. However, it should be remembered that this represents about six weeks work of the Ford plant, operating at full capacity, and that winter is the slack season in the automobile trade. In fact, there is no reason to doubt the frankness of his entire statement; which, in effect, says: "It is time to get back to a sounder price basis. The public is looking for price reductions. Therefore, we have decided to take all possible losses at once, and make such a sweeping cut that people will not expect any further reduction."

Even though the automobile may still be classed as a semi-luxury, the Ford company's operations are on such a large scale that there is abundant reason for considering its action more significant than any of the other price-cutting movements of the past few months. But they all may be taken as showing the direction of the wind. The public is working harder, not only the so-called workingmen, but everybody, and consuming less than a year ago. Crops in general are good throughout the country. Foreign demand is lessened. Where this means that European countries are getting back on a production basis, we are glad. Where it means that industries over there are unable to finance imports of needed equipment or raw materials, we are, or should be, sorry. But in either case, the effect is the same on the local market.

Consequently we have a reduction of about 14% in the food index-number as compared with the high tide of the early spring, together with sporadic announcements of reductions in many lines of manufactured goods. We even have a prediction by the president of the National Clothing Manufacturers' Association that retail prices of clothing will be lower in a few months. Although many commodities remain unaffected, the movement toward lower prices, which the experience of the past leads us to expect, seems to have definitely started.

The question now is, how far is this thing going, and will it produce a panic? As to the first part of the question, the dominant fact is that no wage reductions of importance have been made, and further that any such reductions are going to meet with determined opposition. The margin of profit, or the amount of possible reduction in prices without affecting wages, is still large in some industries. In most industries, however, it is relatively small. In some industries it has been large enough to permit the accumulation of reserves against a time that everyone knew was coming ultimately. If some concerns have neglected this precaution, and we admit that the Federal system of taxation seems to have been devised expressly to encourage such neglect, they are out of luck, that is all. In general, wage reductions will be adopted only after every other expedient for making both ends meet has been exhausted. This will have to be so, and it ought to be.

How about the panic? That is on the knees of the gods. We always have had a panic following a period like the one now passing, but then plenty of other and stronger precedents have been shattered during the past six years. Mention of the Federal Reserve System in this connection has become trite, but there is no denying the fact that our entire financial system is better organized than it was in former times of stress. Furthermore, there is still work for everybody that wants it, and not only is unemployment the principal evil connected with a panic, but no panic could get very far unless there was a great deal of unemployment. And after all, a system that allows unemployment for anybody that really wants to work is a fool thing. Eventually we will be able to order our industrial life so that we can keep everybody at work. Why not now?

Generated on 2024-09-30 02:07 GMT / https://hdl.handle.net/2027/uiug.30112007837690
Public Domain, Google-digitized / http://www.hathitrust.org/access_use#pd-google
Digitized by Google
Original from UNIVERSITY OF ILLINOIS AT URBANA-CHAMPAIGN

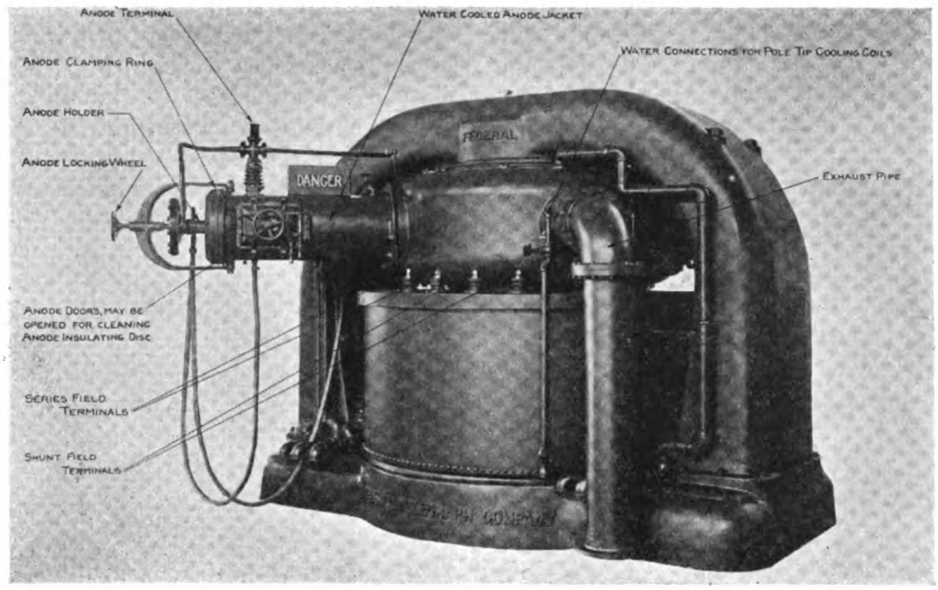

EQUIPMENT FOR THE 1000-KW. STATION AT BORDEAUX

Manufacture of Wireless Apparatus by the Federal Telegraph Company

The recent opening of the 1000-kw. radio station at Croix d'Hins, near Bordeaux, France, called the Lafayette station, marks the virtual completion of the conquest of the earth by radio telegraphy, as this station has a range permitting it to communicate with any other station in the world. The radio apparatus installed in the Lafayette station was designed and built by the Federal Telegraph Co., and the entire equipment was manufactured in its factory at Palo Alto.

The company's manufacturing operations date back to 1908 when a start was made in an old barn on Emerson street in Palo Alto. In 1916 the shop was moved to its present site between the railroad tracks and the State highway just east of the Southern Pacific depot. Since that time the need for increased facilities has necessitated the enlargement of the plant on two different occasions. The present plant is 90 by 405 ft. and contains offices, machine shop and assembling department, tool-room, testing department, laboratory for experimental and research work, shipping department, etc. Besides making its own apparatus, the company also does jobbing work, and is now fabricating a number of internal-combustion engines for an Oakland firm.

In the company's classification, stations of 30 kw. and under are rated as 'low power'; 60 and 100-kw. stations as 'semi-high power'; and stations from 200 to 1000 kw. as 'high-power' stations. The 2 and 5-kw. sets are designed particularly for ordinary merchant vessels, although they can also be used for small land-stations where a long communicating range is not necessary. The 20 and 30-kw. sets are intended for naval vessels and large merchant-ships, and also for land-stations. The largest fighting ships of the United States Navy are equipped with 20 and 30-kw. sets. The 'George Washington' was equipped with a 20-kw. set, and during President Wilson's various trips across the Atlantic, continuous communication was maintained with both Europe and America. 'Semi-high power' and 'high-power' equipments are used only for land stations.

In the manufacture of its equipment, the company has endeavored to standardize both methods and apparatus as far as is reasonably possible. Even for the larger stations, a complete photostat record is made of every drawing from the general lay-out plan to the smallest detail of the equipment. A book of these photostat prints is kept on file as a record of the equipment actually installed at a certain station or furnished under a certain contract. This affords an accurate method of supplying spare parts or additional equipment. During the War the Federal Telegraph Company developed a 2-kw. set for the Navy Department to be installed on small destroyers and boats built for the Shipping Board. A set of this size is being installed on a number of the Shipping Board vessels as well as on many of the boats owned by private companies. It is in this size of set that the volume of the work is sufficient to make advisable a thorough study of the jig and fixture problem, with the result of increased efficiency and production.

Fig. 1 shows one of the 2-kw. sets assembled on a transveyor platform, preparatory to testing and shipment, while Fig. 2 shows the set as it would usually be arranged for service on shipboard or at a small land-station. The

Generated on 2024-09-30 02:14 GMT / https://hdl.handle.net/2027/uiug.30112007837690
Public Domain, Google-digitized / http://www.hathitrust.org/access_use#pd-google
Digitized by Google
Original from UNIVERSITY OF ILLINOIS AT URBANA-CHAMPAIGN

shipping weight of the entire set is approximately 2200 lb. The arc converter is 24 in. high over all, and is 20 in. diam. The daylight range of this apparatus, assuming the receiving stations to have average antennae, is up to approximately 1100 nautical miles, while the night range

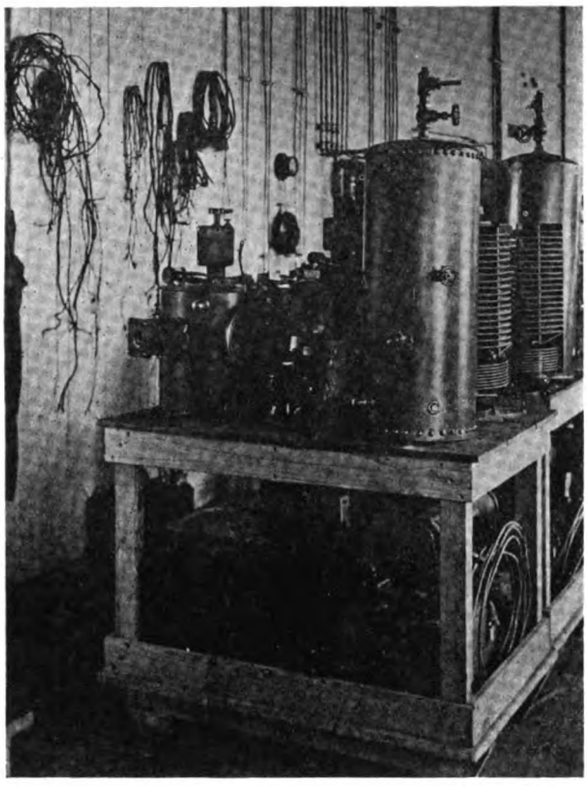

FIG. 1. 2-KW. SET ASSEMBLED FOR TESTING

varies from 1000 to 1800 nautical miles, so that a vessel equipped with such a set and following the ordinary ocean lanes would seldom be out of communication with the land, and practically never out of communication with other vessels.

Fig. 3 shows the commutator-disc or a 2-kw. chopper, the fixture for clamping the disc during assembling, and several other parts of the commutator. The outside-ring is made of alternate pieces of specially rolled copper bar and mica insulation. Every fifth copper segment is connected to a common shorting-ring. When the entire commutator is assembled in the fixture, it is placed in a lathe and the V-shaped ring shown in the figure cut in it. The assembling is then completed, it is taken from the fixture, and the outside of the commutator machined.

Fig. 4 shows a group of bases for the arc-converter unit in process of being assembled, and illustrates the effort

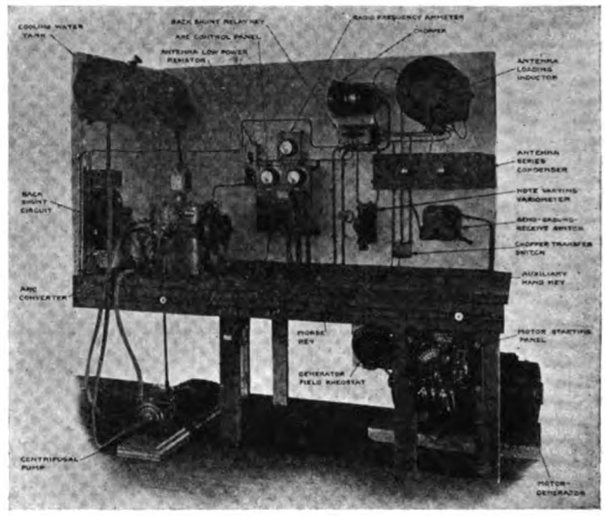

FIG. 2. 2-KW. SET ARRANGED FOR SERVICE

made throughout the work to put the various parts through in as large quantities as possible.

Fig. 5 shows a hobbing fixture used on a Cincinnati milling machine for cutting the teeth in a worm-wheel on a cathode-sheath, which is a brass container for the carbon-holder. In order to have the replaceable carbon electrode of the arc burn off evenly, it is slightly rotated, making a revolution in from three to eight minutes. This hobbing fixture is so arranged as to ensure that the teeth will 'come out even' around the circumference of the worm wheel.

Fig. 6 shows a Bridgeford lathe with the holding fixture for machining the base for the water-circulating

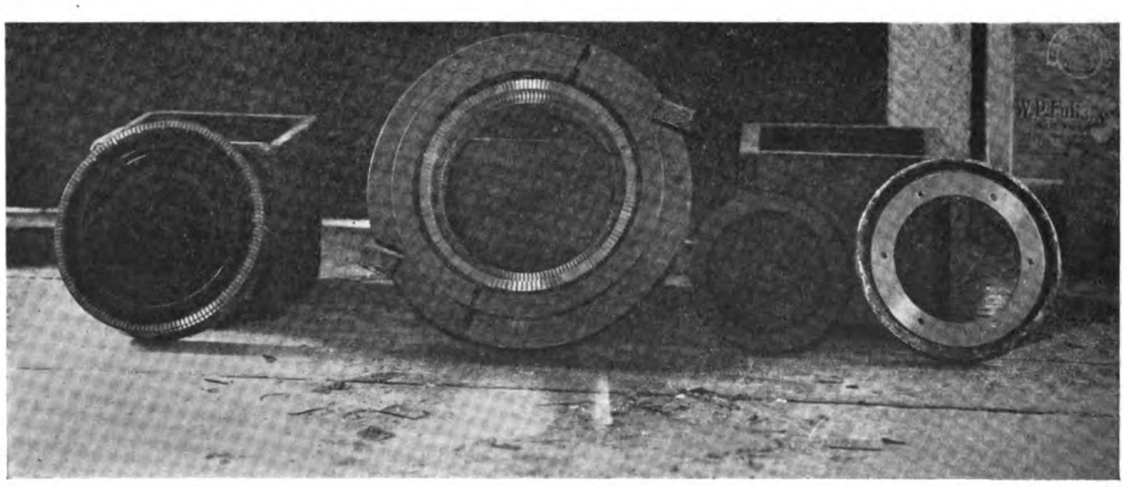

FIG. 3. COMMUTATOR-DISC, FIXTURE, AND PARTS

Generated on 2024-09-30 02:08 GMT / https://hdl.handle.net/2027/uiug.30112007837690
Public Domain, Google-digitized / http://www.hathitrust.org/access_use#pd-google
Digitized by Google
Original from UNIVERSITY OF ILLINOIS AT URBANA-CHAMPAIGN

pump. Boring the hole and facing the surfaces of the disc are accomplished at one 'set-up'.

Fig. 7 shows a Steinle lathe with the holding fixture and the chamber-ring for the arc converter in place, while on the right is a close-up view of the machined part. Four

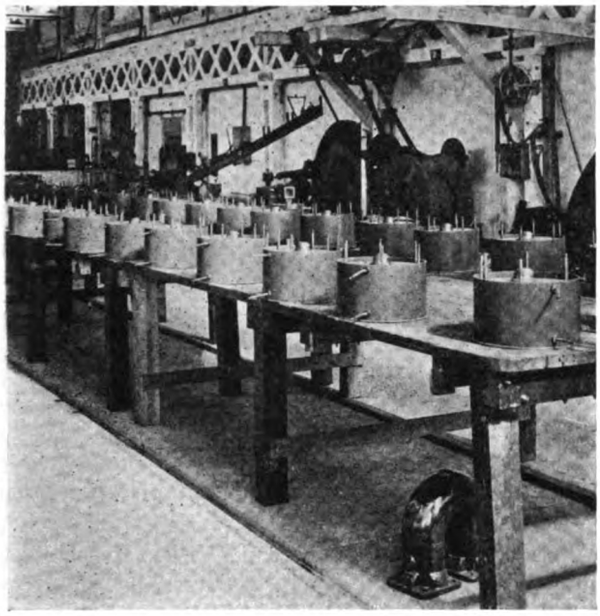

FIG. 4. BASES FOR ARC-CONVERTER UNIT IN PROCESS OF ASSEMBLING

operations, namely, facing and cutting the threads on the electrode bells, and boring the two holes on the left are accomplished at one 'set-up'. The fixture and the chamber-ring are shown turned slightly in the lathe in order to afford a better view of both.

Fig. 8 shows three stages in the manufacture of the antenna-loading inductor. The frame on which the wire is wound is made of bakelite, this being the only material having the required electrical insulating properties to withstand the high voltages and intense electrostatic field surrounding this part of the equipment. The slots through which the wire is passed are made by boring a hole at the bottom of the slot and then cutting out the sides of the slots with a bandsaw. The wire used in these as well as the larger sets has one particularly interesting

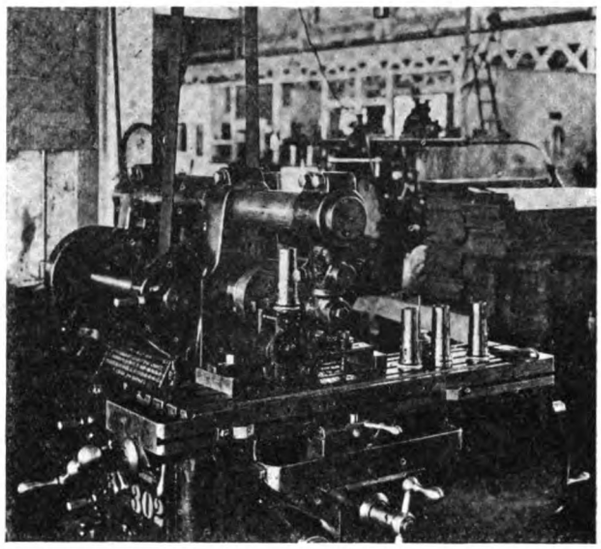

FIG. 5. HOBBING-FIXTURE AND MILLING-MACHINE

feature. It has been demonstrated that radio frequency currents do not flow in the centre of solid conductors, but only penetrate the outer surface for a small distance. Consequently, a solid wire large enough to carry the current would have a large amount of virtually useless material toward the centre of the conductor. Therefore, in place of a solid wire, a cable made of a large number of small insulated strands is used. This cable is built up in somewhat the same way as hoisting-cable. A number of wires are laid into a strand and a number of these strands are then laid around a cotton core-cord. Finally a num-

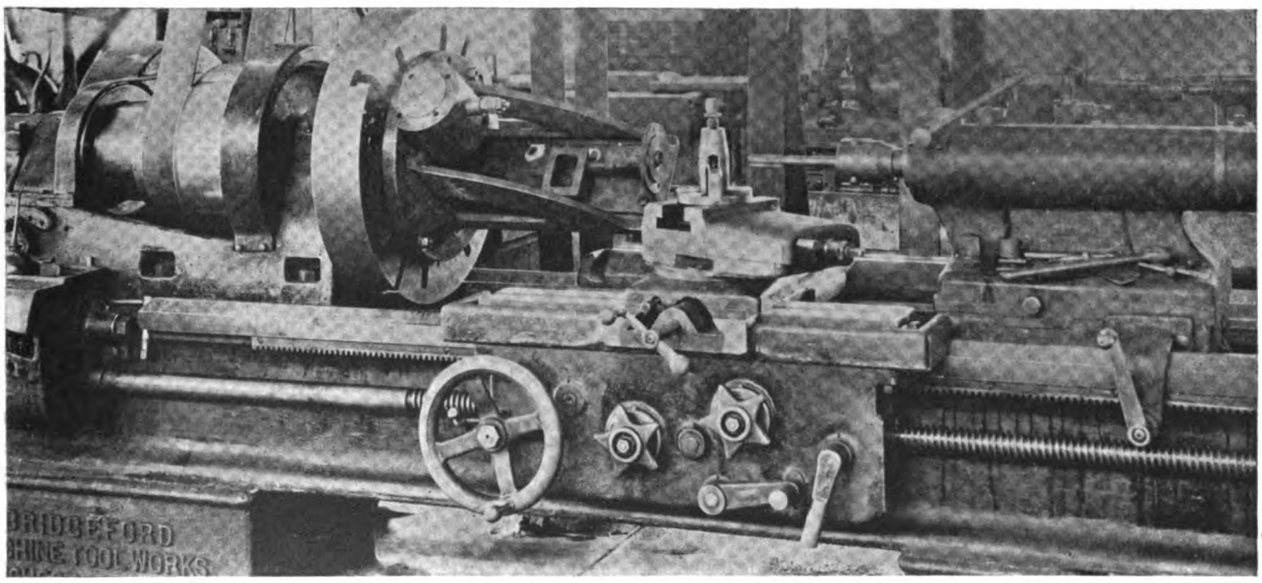

FIG. 6. HOLDING-FIXTURE FOR PUMP BASE

Generated on 2024-09-30 02:11 GMT / https://hdl.handle.net/2027/uiug.30112007837690
Public Domain, Google-digitized / http://www.hathitrust.org/access_use#pd-google
Digitized by Google
Original from
UNIVERSITY OF ILLINOIS AT
URBANA-CHAMPAIGN

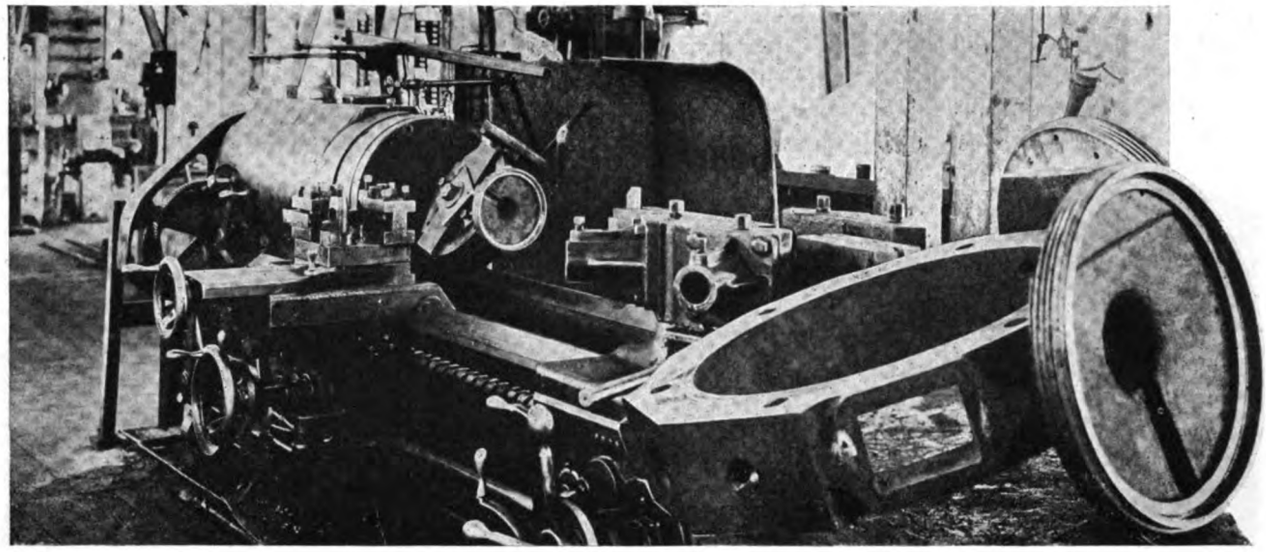

FIG. 7. HOLDING-FIXTURE FOR CHAMBER-RING

ber of these larger strands are stranded around a larger hemp core, and the entire cable covered with the required amount of insulation and given a braiding to hold it together. A cable constructed in this manner, in which all of the wires are insulated from each other, has a large

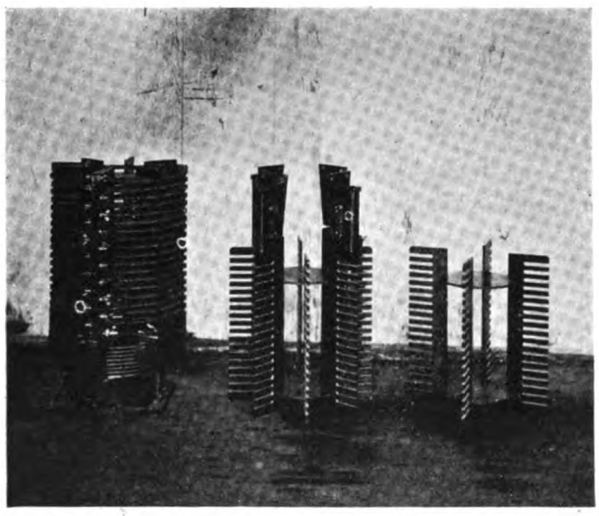

FIG. 8. STAGES IN MANUFACTURE OF ANTENNA-LOADING INDUCTOR

surface and consequently large carrying capacity for current with a minimum amount of copper.

The cable for the largest sets is also made in the same way, the number of wires and the stranding being increased in order to accommodate the increased current-carrying capacity necessary. The cable for the 1000-kw. station at Bordeaux is composed of about 16,000 No. 38 wires.

REX BEACH was motoring through northern Minnesota. He admits that he was aware that the roads in that part of the State were not traveled over much and wasn't looking for any boulevards de luxe, but just the same, he began to have misgivings when the road plunged into a swamp where they had to lower the top to get beneath the boughs of the tamaracks.

"Do many cars travel this road?" asked Beach of some children who happened along.

"Oh, yes sir," they chorused. "Lots of 'em. One came last year, and one this year, and now you're here."

A CHAP named Higgins got home one night to learn that his wife had given birth to triplets—three healthy bouncing boys.

Higgins, overjoyed, went to the boss' office next morning and recounted the rare and wonderful thing which had befallen him. The boss felicitated him heartily, and the next day Higgins was sent for.

He hurried to the office again to find the entire firm assembled there. A handsome silver cup stood on the mantel, and this trophy, in an eloquent speech, the boss presented to him in recognition of the triple blessing which he had bestowed on his country.

Higgins took the cup in his hand, and bowed respectfully and said:

"Excuse me, sir, but is this cup mine now, or do I have to win it three years in succession."—Los Angeles Times.

A LADY and her daughter were riding on a crowded London bus. The bus was approaching their destination. The lady turned to her daughter and whispered: "Don't ask any questions now, but when the bus stops, back out, do you understand, back out." The bus stopped, and to the astonishment of their fellow passengers, they backed down the bus and off. Once safely on the street the daughter demanded the reason for this extraordinary procedure.

"My dear," said the mother, "I heard one of those beastly Yankee doughboys say, "When they get off, let's pinch their seats."—Excavating Engineer.

Generated on 2024-09-30 02:09 GMT / https://hdl.handle.net/2027/uiug.30112007837690
Public Domain, Google-digitized / http://www.hathitrust.org/access_use#pd-google
Digitized by Google
Original from UNIVERSITY OF ILLINOIS AT URBANA-CHAMPAIGN

The Mexicans: Who and What They Are

By An Occasional Contributor

In considering the Mexican question attention must be given to the history and recent racial development of the Mexican people. Constant use of the terms Spanish-America and Latin-America tends to foster the current idea that the Mexican of today bears about the same relation to Spain as the New Englander of the last generation did to England.

Although there is an element of truth in this general belief, the real situation is far different. The fact is, Mexico is not, and never has been, a democracy; it is an oligarchic despotism, more or less feudal in character, masquerading as a republic, and the people are of a race differing, not only from our own but also from the Spanish, in the very fundamentals of their nature. In making this statement I am not referring to the question of mental superiority but to their ideas, ideals, and their mode of thinking, for the average Anglo-Saxon usually requires years of experience to understand them, and some never succeed.

This may be exemplified in the following way: if we consider any ordinary every-day American as influenced by a given set of circumstances, we can predict fairly well what course of action he will take and if he follows one different from that expected we will understand the motives that influenced him, and judge his character accordingly. In the case of the Mexican the average Anglo-Saxon fails utterly, and in the reverse the Mexican succeeds little or no better. The average American going into Mexico judges the country and the people by his Anglo-Saxon standards (which are by no means the standards of the country), and consequently makes many mistakes. The result is that he is looked upon with contempt by the natives (in their turn judging him by their standards) as ignorant and incapable.

This inability to understand the Mexican is nowhere more clearly shown than by our own government. The Mexican is temperamental, but he is just as much influenced by a plea in the name of the 'square deal' (square deal is a much more accurate translation of *justicia* than the dictionary word 'justice') as is the American, but his ideas of a square deal are based on principles fundamentally differing from our own and the attempt to judge one system by the standards of the other is not a success.

Today the population of Mexico is probably about 14,000,000, of whom some 6,000,000 are more or less pure-blooded Indians, still speaking their own languages, the remainder being of white and mixed blood. I believe the census shows over two million whites, but one of the enumerators told me that the figures are of little value. The classification 'white' rests on the individual's own statement, which is biased. My own opinion is that the number of genuine pure whites is less than 2% of the total.

The Indian forms the greatly predominating portion of the mixture. When Cortez discovered the country he found it inhabited by a large number of independent tribes, speaking different languages. Most of these tribes may still be identified; Mexican ethnologists have traced and classified about 700 of them, although the dividing lines are now blurred, and in many cases have disappeared, but all of them, with the probable exception of the Otomis and Seris, are of the same racial stock.

The fundamental difference between the American and the Mexican lies in the fact that the Anglo-Saxon is fundamentally individualistic and democratic, and always has been in spite of feudal branches grafted on the democratic stock. The Mexican, on the other hand, belongs fundamentally to a feudal patriarchal system, even to the extent of recognizing the justice of vicarious punishment.

The second difference is the regard for human life. It is not to be believed that the bloody customs of the old Aztec religion are without effect on the character of the Mexican of today. He shows no hesitancy in killing if circumstances seem to him to require it.

After the conquest the Spaniards at once attempted to take possession of northern Mexico, and sent out colonies consisting mainly of allies, usually Tlascalans, with a few Spaniards in charge, to settle the country, but they were necessarily few and widely scattered. The conditions in the extreme South was somewhat similar. In the attempt to rule this vast domain, much of which was sparsely settled, it is not surprising that revolts and raids ensued. Some tribes never did yield until within comparatively recent years. The Mayas, I believe, did not consider themselves as part of Mexico until a treaty was made within the last fifteen years. It has been said that the only years of peace in the four hundred since the conquest were those during the administration of Diaz.

Northern Mexico is dry and unproductive; the land must be worked in large units with expensive irrigation in order to be profitable. Except in a few favored spots 'forty acres and a mule' are of no value at all. Naturally the small farmer could neither develop a farm nor protect it from Indian raids and bandits when established, so the result was that agriculture was mainly in the hands of the leaders who improved large ranches with walled fortress-like haciendas to protect their families and dependents. Many still remain with their loopholed towers on the alternate corners and a little village within. The individual could not stand alone, so the combination of the feudal and patriarchal systems persisted. Then came the revolution of 1811 and the wiping out of class distinc-

Generated on 2024-09-30 02:16 GMT / https://hdl.handle.net/2027/uiug.30112007837690
Public Domain, Google-digitized / http://www.hathitrust.org/access_use#pd-google
Digitized by Google
Original from UNIVERSITY OF ILLINOIS AT URBANA-CHAMPAIGN

tions, but it could not wipe out the material conditions, nor the heritage of blood and feudalism.

This is a rough outline of the background of the present Mexican status. What then, is the Mexican of today? Taken as a whole he may be said to be a cross consisting of about 83% Indian, 12% Spanish, and 5% Negro, with a strong trace of Asiatic, but the melting process is by no means complete nor is it uniform. In northern Mexico, for example, the mining engineer in the mountains who employs a lot of peons probably has a group that is 95% or more Indian. Villa's forces, excluding adventurers from outside, are probably 90% of the same race as that cooped up on the Navajo, Apache, and Pima reservations. On the other hand, the manufacturer in the city is likely to have a force that is 15 to 20% white blood. In Yucatan, or Oaxaca, or Chiapas, the peons may be pure Indian.

The percentage of white blood increases with rank in the social scale until in a few families it is pure, although I believe this to be true in less than 10% of the cases so reported in the last census, otherwise the early Spanish women must have been extraordinarily prolific. Practically never will a man with predominating white blood be found among the peons. On the other hand, men with pure or predominating Indian blood do often appear among the most important men of the country. Juarez was a Zapotec, so were Diaz and Huerta; and there is absolutely no question about the ability of the first two, at least. Humboldt mentions an Indian millionaire over a hundred years ago. The large number of Zapotecs and Tarascans in public life is proverbial. The great ranch-owners are frequently white though more often there is a trace of color, since marriage with those of mixed blood is not regarded as it was before the revolution against Spain.

The peon, in the mass, therefore may be said to have at least 90% Indian blood, 6% Spanish, and 4% Negro, most of the latter being in the peons of Vera Cruz, Puebla, and other central and southern States. He is superstitious, ignorant, thoughtless, and improvident, kind but easily excited, and then cruel both to people and animals, usually insufficiently nourished, and possessed of a well developed love for the *tierra,* with strong family and tribal loyalty. He is a faithful and steady worker under a just and strong boss who understands him, but lazy and worthless under a weak or unjust supervisor. When properly instructed, well fed, and well managed, he is an efficient worker and a good artisan, and soon identifies himself with the family or concern for which he works. His mentality is low, but how much of that is due to lack of education, insufficient and improper food, and disease, I am not prepared to say—certainly a great deal.

As a people we endorsed Madero's cry for universal suffrage in Mexico, but in our own country the Indian has been placed on reservations under the tutelage of the Government, and Indian schools have been established, yet even in these days of Bolshevism I doubt if many people can be found who would advocate giving a controlling vote to the Apache, Sioux, Navajo, Shoshone, Zuni, Moqui, and Yuma Indians, yet that would be precisely the condition in Mexico under a purely democratic government enforced in accordance with the law. I mention these particular tribes because of their direct relation in language, blood, and custom to those in Mexico.

The Spanish government attempted to rule five million Indians by keeping them in ignorance and subjection, using for the purpose a few thousand Spanish-born agents, aided by a favored class which was united as against the divided Indian tribes. The revolution of 1811 was successful against this state of affairs not because of the combining of the Indians, but because the favored class of white creoles was jealous of the authority and prestige of the Spaniard. The first ruler after the revolution was a creole, Iturbide. As soon as the Spaniards had been overcome, the creoles expected to rule the country, but their caste itself was too heterogeneous and did not hold together, owing to the presence of strong mestizo and Indian elements. The situation was somewhat as it would be in the Southern States if there were seven blacks for every white man and a few favored blacks and mulatos were classified as white. It must be remembered, first and last, that the Spaniards never did control the whole country. Indian raids and robberies were numerous, particularly in the northern part, and banditry was common even in the parts that the Government did control. After the break-up of the Spanish government and the failure of co-operation and unity among the whites, one party after another seized the power, but was never strong enough to accomplish anything definite. Lempriere, writing in 1859, says: "In 38 years the country has had 36 different forms of government and 72 individuals have figured as chief executives."

Mme. Calderon de la Barca, writing during the early years of this period, mentions the necessity for armed escorts with the stages and of having had prominent bandits pointed out to her on the city streets. She describes a Governor's ball and mentions that the gentlemen put on their pistols, as a matter of course, before leaving. Lempriere, in 1862, says, "Life is utterly insecure in Sonora, Sinaloa, Chihuahua, Coahuila, Durango, etc", and "the ransom system is coming more and more in vogue . . . The murderers of Yorke, the young American attaché, are perfectly well ascertained citizens resident in Tepyahualco . . . The civil power has no force . . . Mr. Mathew's residence in Mexico was forcibly taken possession of on the 16th of November, 1860, by General Lagarde under a pretence, the falsehood and absurdity of which must be notorious, that a deposit of arms was concealed."

In other words, the present condition of Mexico is normal; the period of safety and industrial development under Diaz was abnormal.

After some twenty years experience in Mexico, my opinion is that Diaz was driven out as a result of the educational system he established. The Spanish viceregal system was certainly founded on the ignorance of the Indians. The Church was an essential part of the Spanish state in Mexico; after the revolution it still re-

Generated on 2024-09-30 02:10 GMT / https://hdl.handle.net/2027/uiug.30112007837690
Public Domain, Google-digitized / http://www.hathitrust.org/access_use#pd-google
Digitized by Google
Original from UNIVERSITY OF ILLINOIS AT URBANA-CHAMPAIGN

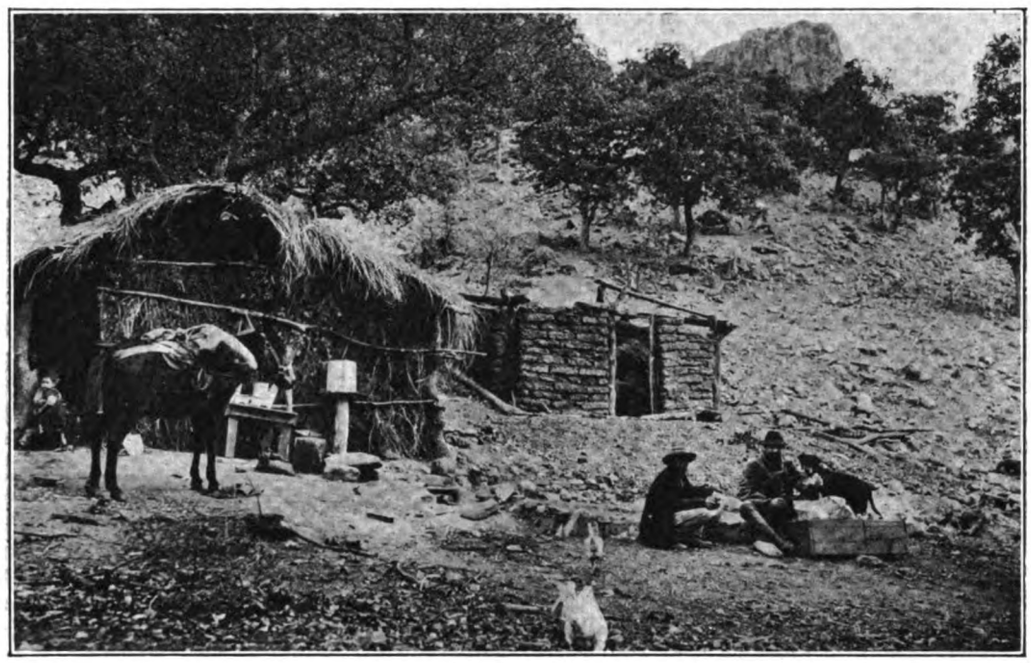

AN INDIAN CAMP

A GROUP OF REVOLUTIONISTS, SUPPORTERS OF MADERO

Generated on 2024-09-30 02:07 GMT / https://hdl.handle.net/2027/uiug.30112007837690
Public Domain, Google-digitized / http://www.hathitrust.org/access_use#pd-google
Digitized by Google
Original from
UNIVERSITY OF ILLINOIS AT
URBANA-CHAMPAIGN

tained its power, and did not attempt in any way to educate the Indian except as to his duties to the Church. The school as a means of secular education dates practically from the time of Diaz, and while the system of public schools which he established was far from what is considered ideal in the United States it was a vast improvement over anything preceding it. By 1910 a generation had arisen that knew the rights to which they were entitled under the law, but still did not know how to use those rights with discretion, and failing to obtain them because of their neglect to observe at the same time the maxim of Juarez, "Peace is the due regard for the rights of others", caused the downfall of the Diaz administration. If Diaz could have had his health and strength for twenty years longer, I believe Mexico would have attained a well-established liberal government in peace and quiet. In 1910 practically all the young men of city and town could read and write, but during the last few years most of the schools have been closed except in the larger cities. Children who were of school age in 1910 must now work to earn a living and the generation now growing up knows nothing but revolutions and their attendant troubles.

Those who state that there never was an honest election in the time of Diaz are perfectly correct. There never has been one in Mexico. Madero's election was a farce and Carranza's rested on his own *ipse dixit,* but, by the same token, how many elections have there been in Mississippi that have lived up to the spirit of the Fifteenth Amendment? Can South Carolina or Florida throw the first stone? How can any man in Mexico on whom the welfare of the country depends trust the election to a majority of uneducated and ignorant Indians? I do not except the recent election. That it represents the wish of the majority of those now in control of Mexican affairs, I grant; but I doubt if 2% of the population voted, and I am sure that not more than a quarter of those had the slightest idea of what they were doing. I am equally sure that if any large number had wished to vote against Obregon they would have had considerable difficulty in getting their votes counted without the usual preliminary discussion with Mauser rifles.

Prior to the coming of the Spaniards there was no government of Mexico as such, because, as previously stated, the country was inhabited by a considerable number of independent Indian nations. After the conquest the history of the government may be divided into three periods:

The first period, from the conquest until the end of the revolution against Spain in 1821, consisted of the government of a number of subjugated Indian tribes by a few thousand agents of the conquering nation. This period was marked by the education of the dominant race only, and the form of government failed because the favored class finally recognized its own power and seized the government for itself.

The second period lasted until the French intervention in 1862. In this case a ruling white caste attempted to govern a large mixed caste and a number of more or less closely related Indian tribes. There was education of the dominant groups only. The system failed because of a lack of solidarity in the ruling caste and its failure to recognize the nature and strength of the subordinate castes. It is to be noted that two of the important leaders who overthrew it were pure-blooded Indians.

From 1862 to 1867 there was an interregnum, due to an attempt to re-establish a combination of the first two systems by aid of the French. It failed, because it possessed the bad points of both.

The third period, from 1867 to the fall of Diaz, represented the governing of a number of Indian races by a ruling caste, consisting of a dominant clique mainly of the white race, and a subordinate larger group mainly of mixed blood, membership being dependent on money, education, or political control. This period was marked by an attempt to establish general education. It failed because of insufficient recognition of the power of the awakening subordinate caste, which had not yet acquired sufficient knowledge to use its power justly or harmoniously.

The year 1911 was marked by an ill-judged attempt to establish a government of the people by universal suffrage. It was a complete failure, because the general education was as yet insufficient to weld the heterogeneous elements into a unified nation. The failure has resulted in the re-establishment of the third form of government in its earliest stage. If that attempt had been postponed 20 years, I believe that revolution would not have been necessary.

The recent revolution and election introduce no new element. Obregon is a creole, that is, he is of Spanish descent, which in itself is a source of weakness. Apparently the Indians best understand the Indians and there is more than a suggestion of this truth in the fact that Juarez, Diaz, and Huerta died in their beds while Iturbide, Madero, and Carranza (creoles all) died from the common over-dose of lead. Obregon, however, has shown marked ability in handling the Indians of the North, and now that he is president and resident in Mexico City he may succeed with the Indians of the South, but there has been little love lost between the two regions and he is between the devil of jealousy if he surrounds himself with old friends and the deep sea of uncertainty if he abandons them for new ones. He has, however, shown himself able to profit by the experiences of his predecessors, and our people at Washington likewise are learning, if somewhat slowly. The death of Carranza will be forgotten, unlike that of Madero; the outlook is now the brightest it has been since Madero started his revolution; nevertheless the elements of weakness are there. Time alone will tell whether Obregon has the requisite strength and wisdom.

Once more I quote from Lempriere, who, sixty years ago, wrote:

"The merciful hand of Providence has bestowed on the Mexicans a magnificent land, abounding in resources of all kinds—a land where none ought to be poor, and where misery ought to be unknown. . . . One thing alone is wanting, that is a government—and the absence of this mars all the other magnificent advantages."

Generated on 2024-09-30 02:09 GMT / https://hdl.handle.net/2027/uiug.30112007837690
Public Domain, Google-digitized / http://www.hathitrust.org/access_use#pd-google
Digitized by Google
Original from UNIVERSITY OF ILLINOIS AT URBANA-CHAMPAIGN

Employee Representation at the Standard Gas Engine Company

The year 1919 was characterized in the Standard Gas Engine Co. factory, as in other metal-trades plants in the San Francisco Bay district, by labor troubles, which caused periods of idleness at the plant that were intolerable from the standpoint of both employer and employee. Ever since the formation of the company, the management had made earnest efforts to cultivate right relations between employer and employee, and the company was one of the first in the Bay district to establish a separate department to handle industrial relations. Nevertheless it was seen that some system was needed whereby the men in the factory might have an opportunity to present their views to the management and to elect representatives, who might confer with the management on matters affecting their interests.

Even before the company and the other members of the California Metal Trades Association re-opened their plants in November 1919 after they had been closed by the strike, the company officials were working on a plan for employee representation, and a tentative plan was placed in operation early in the present year. The plan differs somewhat from the general plan proposed by the Metal Trades Association, and which is now in effect, with local modifications, in the shipyards and some other plants. It is believed by the officials of the Standard company that the plan adopted by them is better suited to a relatively small concern than is the Association plan. The Junior Council or 'shop committee' elected about the first of the year assisted in drafting the permanent constitution, which was adopted by unanimous vote of the employees on June 15 last. The constitution follows:

Preamble

1. We, the employees and officials of the company, in order to better working conditions, do proclaim our belief in and adherence to the following principles:

Americanism, Justice, Co-operation, Economy,

Energy, Service.

2. Americanism in all that the word implies shall be a necessary qualification for all members of this organization.

3. Justice in the widest sense shall be the basis of all our dealings, whether among ourselves individually or as an industrial organization dealing with its individual members or with those from whom we buy or those to whom we sell.

4. Co-operation is necessary to attain the greatest results as individuals, and, as an institution; therefore, we must all pull together, and freely, cheerfully, and willingly work in the spirit of harmony.

5. Economy: To become successful it is necessary that we learn and that we make the best use of time, materials, tools, and energy.

6. Energy properly applied is the power that produces results. Since results are the measure of our success it is necessary that we devote all our energy, both of mind and body, toward their accomplishment.

7. Service is an honest devotion to duty, and as we intend to fully and honestly live up to the above principles—Americanism, Justice, Co-operation, Economy, and Energy—unusual service will be obtained and thus shall be established not only the reputation but the character of serving the best and the most, and we shall deserve and receive proportionately.

8. Under these six principles, which form the basis of the policy of this organization, it is recognized that the employees shall receive a just remuneration based on their individual worth and on their collective productive efficiency.

9. Therefore, in order to secure to the utmost the benefits of the close adherence to the foregoing great ideals we hereby create and adopt this Constitution:

Article I

Section 1. For the proper execution of the Constitution there shall be provided three councils—An Executive Council, a Senior Council, and a Junior Council.

Article II

Section 1. The Executive Council shall be composed of the directors of the company, elected by the stockholders, and the officials of the company, elected by the directors.

Sec. 2. Since this Council must assume final responsibility, it shall be its duty to sanction or to veto all measures, except as it may delegate this duty to the general manager.

Article III

Section 1. The Senior Council shall be composed of the department heads, appointed by the general manager, who shall be the permanent chairman of this Council and shall vote only in case of a tie.

Sec. 2. Its officers shall consist of a chairman, vice-chairman, and secretary, appointed by the general manager.

Sec. 3. It shall meet at such place, time and at such intervals as it shall decide, but not less often than once each month, and should the need arise for a special meeting, the chairman shall call same by notifying the members.

Sec. 4. Its duties shall be—

(*a*) To consider and act on any communications or bills that may be sent to it by the Junior Council.

(*b*) To originate bills; in which case they must be presented to the Junior Council for its consideration

Generated on 2024-09-30 02:08 GMT / https://hdl.handle.net/2027/uiug.30112007837690
Public Domain, Google-digitized / http://www.hathitrust.org/access_use#pd-google
Digitized by Google
Original from UNIVERSITY OF ILLINOIS AT URBANA-CHAMPAIGN

and action before presenting same to the Executive Council.

(c) To make such recommendations to the management, as in its opinion, may seem desirable.

ARTICLE IV

Section 1. The Junior Council shall be composed of one representative elected by secret ballot from each department for a term of twelve months.

Sec. 2. There shall be elected in the same manner an alternate to discharge temporarily the duties of the representative in case he is not personally able to do so.

Sec. 3. In case of a vacancy, there shall be held a special election in the particular department affected.

Sec. 4. The election of the representatives and their alternates shall be held during the last half of the month of June and December of each year.

Sec. 5. Those eligible to vote shall have been members of the organization for at least 30 days and must be at least 18 years of age.

Sec. 6. Candidates for an elective office must have been in the employ of the company for at least 3 months and must be at least 21 years of age.

Sec. 7. No nomination shall stand unless the candidate is present, or has given his consent, or, if present, if he objects to such nomination.

ARTICLE V

Section 1. Half or approximately half of the representatives shall be elected every six months and shall take office at the first meeting in July and January in place of the retiring members.

Sec. 2. The present Junior Council shall make a division before June 15, 1920, among its members by drawing lots to determine those representatives who shall retire at the first meeting in July.

ARTICLE VI

Section 1. The officers of the Junior Council shall consist of a president, vice-president, and secretary, to be elected by secret ballot for a term of six months; this election to take place at the first meeting of each new council.

ARTICLE VII

Section 1. The Junior Council shall meet at least once each month. Should the need arise for special meetings the council president shall call same by notifying the members.

ARTICLE VIII

Section 1. The duties of the Junior Council shall be—

(a) To investigate all disputes and grievances which may arise and, if impractical of settlement by the Junior Council, make suitable recommendations to the Senior Council.

(b) To formulate, and act on, suggestions and bills on which decision shall be passed to the Senior Council;

(c) To consider and act on any suggestions or bills that may be communicated to it by the Senior Council, which matters shall be referred back to the Senior Council with such recommendations as may seem expedient.

Sec. 2. The president of the Junior Council shall appoint all committees in that Council.

Sec. 3. It shall be the duty of each representative to interview at once anyone in his department who may have a grievance and endeavor to obtain a speedy and just settlement of same, if necessary bringing the matter to the attention of the Junior Council.

ARTICLE IX

Section 1. All bills and suggestions before being put into force must first be passed by a majority vote of both Senior and Junior Councils, and then be approved by the Executive Council, provided, however, that the general manager may at his discretion, pass upon such matters, acting under the authority conferred upon him by the Executive Council and provided further that in the event of a veto by the general manager, the measure may, by a two-thirds affirmative vote of both Senior and Junior Councils, be referred direct to the Executive Council, whose action shall be final; 80% of the membership of any council shall constitute a quorum.

ARTICLE X

Section 1. Amendments to this Constitution may be introduced into any Council, but before being put into force must first be passed by a two-thirds vote of the Junior and Senior Councils; second, by a two-thirds vote of a general meeting of the organization, which meeting must have at least 80% of its members present who are eligible to vote; and, third, such amendments must be approved by the Executive Council.

The constitution has been signed by all employees of the company.

Scarcely nine months have elapsed since the original adoption of the plan, and only three since the adoption and signing of the permanent constitution. Those who expect to read that the industrial millenium has been attained are going to be disappointed. It has not been, and nobody expects that it will be. A few things, however, stand out as a result of the experience to date.

1. Nearly all of the representatives that have been elected to the Junior Council are 'high-grade' intelligent conservative men, men who take a great interest in the work of the Council.

2. In addition to this, the effect of responsibility is such that radical measures, however attractive they may be superficially, are disapproved.

3. The employees in general have confidence in their representatives, and are pleased with the success of the plan.

4. Because of this confidence, a number of changes, minor in themselves, but important in the aggregate in making for greater efficiency, have been possible. This has been accomplished by the management explaining matters to the Junior Council, which in turn 'got it over' to the other employees. Had such changes been attempted under the old system, the men would have been suspicious, and attempts to make these measures effective failed, either entirely or at least in part.

Generated on 2024-09-30 02:13 GMT / https://hdl.handle.net/2027/uiug.30112007837690
Public Domain, Google-digitized / http://www.hathitrust.org/access_use#pd-google
Digitized by Google
Original from UNIVERSITY OF ILLINOIS AT URBANA-CHAMPAIGN

FIG. 5. MAIN ASSEMBLY AND ERECTING FLOOR

Service and Parts Department of the C. L. Best Gas Traction Company

The purchaser, particularly the purchaser of machinery, demands Service, and must have it, or he will take his account elsewhere. More likely, he will buy elsewhere in the first place, selecting a concern with a reputation for giving Service. This article tells how the C. L. Best Gas Traction Co. is solving the problem of giving Service to the purchaser, and at the same time, securing efficient production.

The service department of the C. L. Best Gas Traction Co., of San Leandro, was organized about three years ago, under the direction of W. Wagner, its present head. Prior to that time there was no definite organization to take care of the service needs of the customer. The sales and the production departments did what they could, but the results were far from satisfactory, either to the customer or to the company. For some time after its organization, the service department functioned as a sort of offshoot of the production department, all parts for replacements and repairs being made in the production department, and drawn from the main storeroom. As a result, it frequently happened that a machine-tool had to be taken off production and set to work on an order for parts for some tractor-model no longer being manufactured. Since it would be poor policy to carry a large stock of parts for this machine, such an order would be necessarily small, and the proportionate expense heavy, not to speak of the possible inconvenience caused by a delay in production.

Recent re-arrangement of a large part of the plant provided the opportunity for making radical changes in both the organization and the scope of the service department. This department, which is now called the Parts and Service Department, is independent of the rest of the factory, except they still have the same receiving department.

The Service and Parts Department is housed in a corrugated-iron and wood-frame building, 100 by 300 ft., on the opposite side of the street from the main factory. There is a spur-track and loading-platform along one side of the building, while another spur runs into the building at about the middle point, and at right angles to its long side. One-half of the building, or a floor-space 50 by 300 ft., is devoted to assembling, while the remainder of the building is divided between the office, storeroom, machine-shop, and jig and tool-room. The department is thus practically a small factory in itself. Including outside repair-men, the total number of employees at the present time is about 50. An endeavor is made to have at least one man experienced in making field repairs available at all times and ready at a moment's notice to help the farmer in distress. Orders for parts received in the morning are filled and shipped the same day.

Generated on 2024-09-30 02:10 GMT / https://hdl.handle.net/2027/uiug.30112007837690
Public Domain, Google-digitized / http://www.hathitrust.org/access_use#pd-google
Digitized by Google
Original from UNIVERSITY OF ILLINOIS AT URBANA-CHAMPAIGN

It will readily be seen that to accomplish such a result, a well-organized storeroom is necessary. This department is in charge of H. L. Hintze. Fig. 1 shows small parts ready for shipment, while in the background are some of the bins for holding parts. Fig. 2 shows an aisle in the storeroom with bins on each side. All parts for model A have a prefix 'A' before their part-number, and similarly for the other models. In all there are several thousand parts listed and kept in stock. On each bin there is a card, which gives the part-number, such as A-661, a brief description of the article, the minimum and maximum quantities carried, and the item number. The minimum is usually ten times the total number needed for a single machine. Thus if there are ten gaskets of a certain pattern required on model A, the minimum for that type of gasket would be 100. The maximum depends on the probable demand for the part in question. A rough balance must be struck between the advantages of quantity production in the shop and the disadvantages of having a considerable amount of capital tied up in spare parts. The item-number has the same letter-prefix as the part number, but different figures. Thus the item-number corresponding to part-number A-661 is A-714. This serves as an extra check on errors in ordering. When the quantity of a given part approaches or reaches the minimum, a pink card is inserted in the rack and remains there until the bin is filled again. At the same time the storekeeper fills out a memorandum requisition calling for the manufacture or purchase, as the case may be, of the required number of parts. This amount is checked and approved by the head of the parts-sales department, or if the number recommended by the storekeeper is greater or less than his judgment dictates, based on his sales-records, this is adjusted before being referred to the manager of the service department for decision and approval. Where a requisition calls for purchase of material from the outside, it must be approved by the factory manager also. A perpetual card-inventory is maintained in the office, showing, besides the state of the stock at any time, the same information as is shown on the cards on the bins in the storeroom.

FIG. 1. PART OF SHIPPING-ROOM. STORAGE-BINS IN REAR

For an order requiring purchase from the outside, a different form is used than an order requiring manufacture in the department. The material received on purchase orders is inspected, checked by the store-keeper or his assistants, and stored. On orders requiring manufacture, labor is charged on time-cards in the ordinary way, and material requisitioned from the storeroom. When the parts are completed, they are inspected, the order checked, and delivery made to the storeroom. Parts required by the service department for either replacements or repairs are drawn from the storeroom upon requisition. Where, for any reason, parts are to be transferred from the production department, instead of being made by service-department forces, a different form is used. Another form is used for customers' order coming in by mail, telegraph, or telephone. Such an order is delivered to the storekeeper for filling, from which it goes to the shipping department and is checked before being turned over to the packer. Other forms are required for listing material returned for credit and for listing obsolete and other material, which is no longer to be carried in stock.

FIG. 2. AISLE IN STOREROOM

No one is allowed in the stores department except the storekeeper and his assistants and the truckers delivering or taking away material. All movement in and out of the storeroom must be covered by the proper requisition.

Generated on 2024-09-30 02:10 GMT / https://hdl.handle.net/2027/uiug.30112007837690
Public Domain, Google-digitized / http://www.hathitrust.org/access_use#pd-google
Digitized by Google
Original from UNIVERSITY OF ILLINOIS AT URBANA-CHAMPAIGN

Material is handled by electric and hand trucks, as was more fully described in 'Metal Trades' for April 1919. To ensure service whenever required, all parts needed are kept in stock even when the company from which they are purchased maintains a distributing office and warehouse right in the Bay district.

Two views of the machine-shop are shown in Fig. 3 and 4. This department is run in the same general manner as the main shop across the street, although the orders for any one part are necessarily smaller. Some parts, however, are made in quantities as great as 100 at a time. All jigs, fixtures, etc., required are kept in the room shown at the left of Fig. 4.

Fig. 5 shows the assembling department, only in this case, dis-assembling is also done. Tractors shipped in for overhauling are brought into the building on a standard-gauge track, and unloaded from the cars by the 2½-ton crane shown in the photograph. While the company stands ready to render every possible service in the line of field repairs, owners of tractors are advised to send their tractors to San Leandro whenever possible, as not only are the shop facilities necessarily better for making the particular repairs desired, but a thorough inspection of the machine in the shop nearly always discloses the need of other overhauling, which would have been either neglected or else completely overlooked if field repairs had been made. Shop repairs are also better and cheaper than repairs in the field. A tractor that has been through the shop is re-built, not repaired, and carries the same guarantee that a new machine does.

An interesting feature of the service department is the magneto-room, which is in charge of an expert, who devotes his entire attention to this work. His activities are in two divisions, the testing of new magnetos, and the testing and re-building of magnetos from tractors that have been in service. The testing of new magnetos is mainly either for the purpose of comparing different makes, or by occasionally running a magneto at random from a stock shipment until it breaks down, to assure the company that the magnetos supplied continue to be up to standard. Magnetos from all tractors sent to the service department are tested, whether the owner has made any report of ignition troubles or not, and are overhauled and placed in first-class condition. Fig. 6 and 7 illustrate several home-made devices developed for this work. In Fig. 6, on the left is a K-W magneto on the testing-stand, while directly above it is the spark-gap device. The device may be adjusted for a longer gap than would possible be required in service, so that the magneto showing satisfactory results has a large 'factor of safety'. The testing-stand has fixtures to fit each magneto used on the tractors, so that less than a minute is required for disconnecting one magneto and connecting another. At the right of this stand is the apparatus used for recharging magnets, while on the extreme right is a device for testing the windings. Above this apparatus and to the right of the spark-gap device is the equipment used for testing spark-plugs. Fig. 7 shows the new model RK of the K-W magneto on the testing-stand, which is

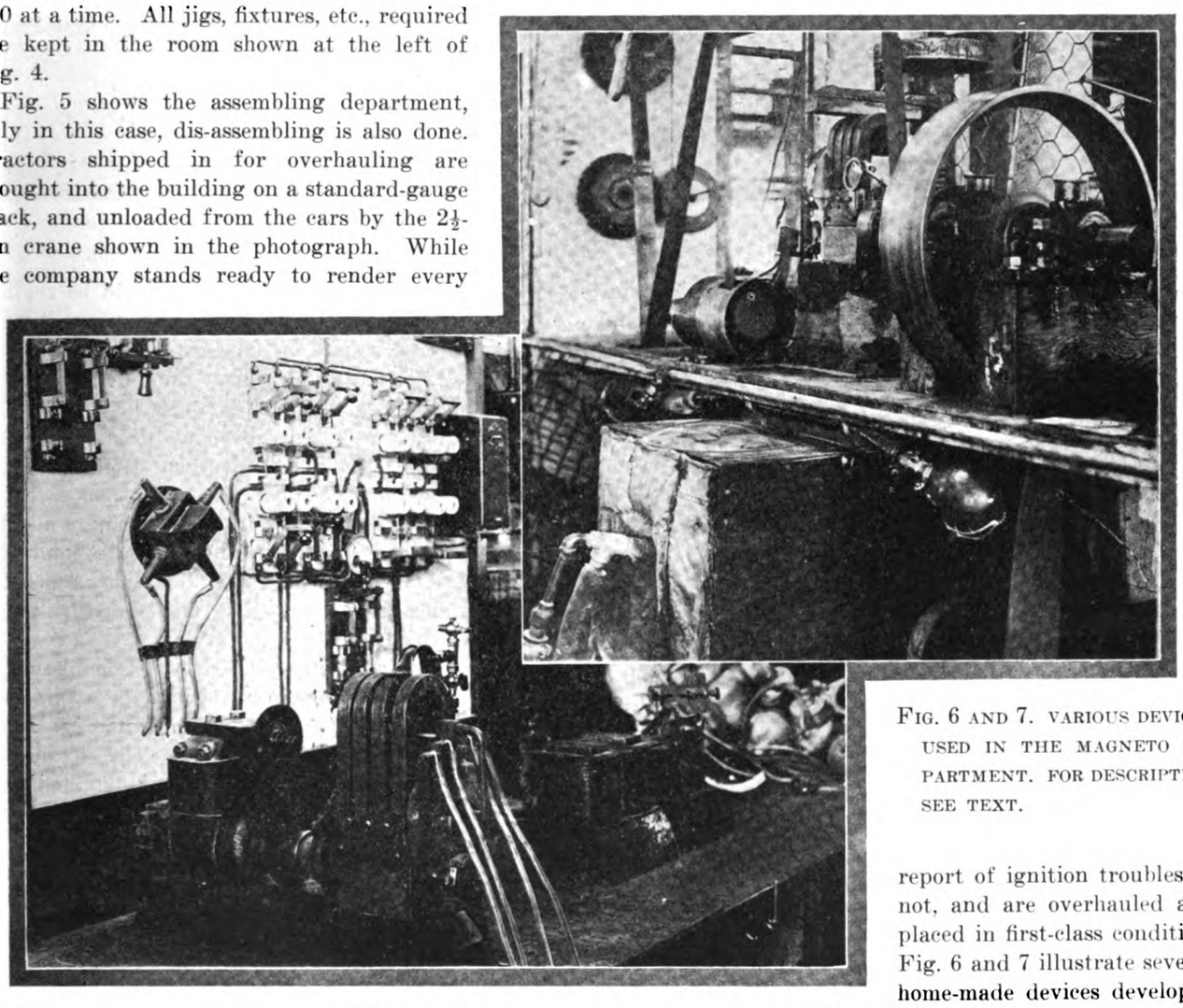

FIG. 6 AND 7. VARIOUS DEVICES USED IN THE MAGNETO DEPARTMENT. FOR DESCRIPTION SEE TEXT.

Generated on 2024-09-30 02:12 GMT / https://hdl.handle.net/2027/uiug.30112007837690
Public Domain, Google-digitized / http://www.hathitrust.org/access_use#pd-google
Digitized by Google
Original from UNIVERSITY OF ILLINOIS AT URBANA-CHAMPAIGN

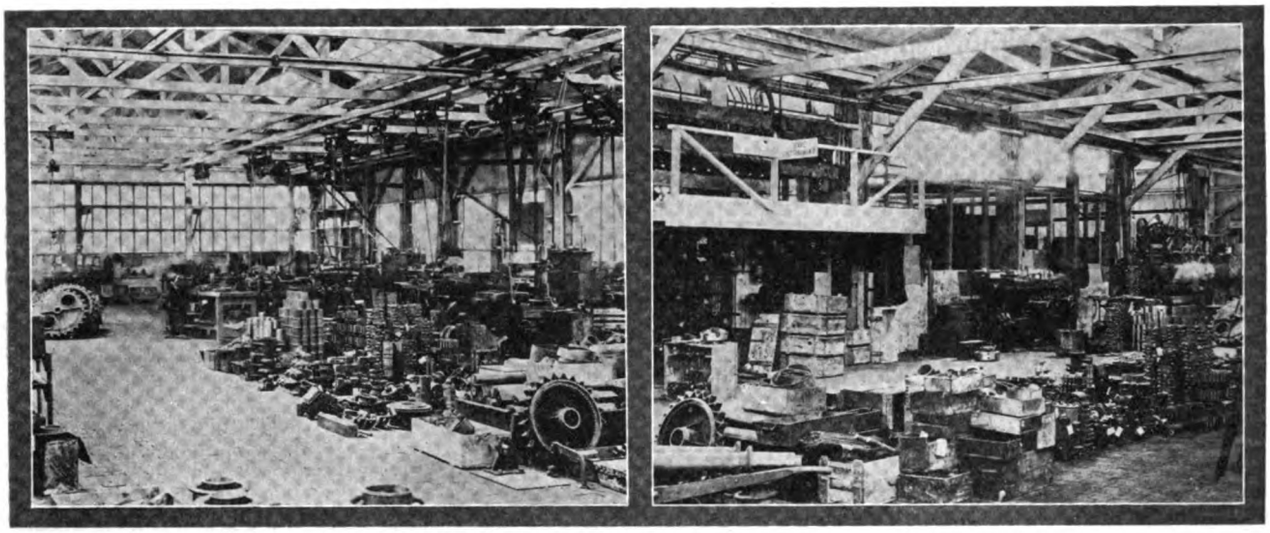

FIG. 3 AND 4. TWO VIEWS OF THE MACHINE-SHOP

being run continuously until it fails. At the time the photograph was taken, over one million impulses had been recorded. Below the testing-stand is a small sand-blast apparatus for cleaning carbureters.

A Foreman's Responsibilities*

By L. DEE MILLER

What employer would entrust $30,000 to each of his foremen without security, and without watching each foreman to see what use he made of this money, and the care he took of it, that the amount could be returned safely when required? How many foremen would be willing to take this amount of money from their employer's office each morning, carry it around all day and return it at night, only to repeat the act the next day, and for every working day of the year? Such a foreman would be worn to a frazzle before a week was over, worrying for fear he would lose some of this money, or something might happen to him that would prevent returning it to the office at quitting-time.

The average employer is handing out just about such an investment to each foreman who is in charge of ten men. If the foreman is 'on the job' he returns this investment intact each night. But if he is not 'on the job', keeping his eyes open for unsafe conditions or practices, having the same corrected as soon as discovered, constantly instructing his men in the safe method of working, and especially new employees who may not be familiar with the class of work being performed, there is going to be a deficit caused by one of his men being injured.

I do not mean to say that all acidents can be eliminated, be the foreman ever so careful, but the number can be greatly reduced. I have often watched a foreman rave and rant because some tool that could be replaced for a few dollars had been left in the open where it would rust, or had been abused or damaged in use. This same foreman had nothing to say about the dangerous conditions existing all around the men under his charge. His general attitude was to drive ahead, get production, never mind how obtained, or under what conditions.

Practice and experience have shown that men working under reasonably safe conditions turn out more and better work than those working under unsafe conditions. Also they are more contented with their jobs and hold a closer allegiance to the employer. The labor turn-over is reduced, which in itself is a big saving.

The report of the Industrial Accident Commission for 1918-1919 shows the average settlement for a fatal accident to have been $3303.20; for a permanent injury $1071.46; and for a temporary injury $82.29. From these figures it is easy to see how a foreman with ten men under him is handling an investment of approximately $30,000 of his employer's money.

Will foremen awaken to this fact, remember the amount of the employer's money for which they are responsible, and begin to try and save some of it? Less accidents mean greater production in any industry or business except undertaking.

Will the employer give this investment as much consideration as he gives the purchase of tools or equipment? Will he insist on the foremen enforcing the reasonable safety rules of the shop or works, insist on conditions being made reasonably safe, orders being obeyed, safety appliances or guards being kept in place, and hold the foreman personally responsible for accidents in his department? The number and seriousness of accidents, or rather the lack of accidents, should determine to a great extent the fitness of a foreman to be in charge.

An employer will place a book-keeper or cashier under heavy bonds to protect his funds, but will entrust an investment representing over $3000 for each man under a foreman without any security, or investigation of his ability safely to conserve the investment.

*From 'California Safety News' published by the Safety Department, Industrial Accident Commission of California.

Generated on 2024-09-30 02:10 GMT / https://hdl.handle.net/2027/uiug.30112007837690
Public Domain, Google-digitized / http://www.hathitrust.org/access_use#pd-google
Digitized by Google
Original from UNIVERSITY OF ILLINOIS AT URBANA-CHAMPAIGN

Aluminum Alloys

In a paper presented before the American Society of Mechanical Engineers, G. M. Rollason, of the Aluminum Castings Co., said in part as follows:

The importance of aluminum alloys is mainly due to the fact that the lightness of aluminum can be combined with marked improvement of mechanical properties such as tensile strength. The term 'light alloys' is frequently used to describe those alloys having an aluminum base and whose specific gravity ranges from 2.65 to 3.0 (165 to 187 lb. per cubic foot). This division is arbitrary, but it is interesting to note that when there is enough heavy metal in the alloy to give a specific gravity higher than 3, the mechanical properties at the same time change to such an extent as to render the material unsuitable for many engineering purposes. The alloying of a metal lighter than aluminum, such as magnesium, will bring the gravity below 2.65, but there are not many commercial alloys where magnesium is used in such an amount as to reduce the gravity materially without simultaneous additions of other heavier metals to produce a counteracting effect. The outside limits for aluminum alloys in commercial use are set on the light end by an alloy containing 5% magnesium, with a specific gravity of 2.47, and on the heavy end by an alloy containing 33% zinc, with a specific gravity of 3.3. The light aluminum alloys that are used for sand-casting in America centre for the most part around different copper-aluminum combinations. The principal aluminum alloy used for castings in the United States consists of about 92% aluminum and 8% copper, and is generally known as Aluminum Co. of America's No. 12 alloy or S. A. E. specification No. 30. This alloy when cast in a ½-in. test-bar in green sand and tested without machining off the skin should give an average tensile strength of about 20,000 lb. per square inch and an average elongation of 1.5% in 2 inches. A modification of this alloy having somewhat better physical properties is now being used extensively for castings for the automotive industry. This alloy contains 7.5% copper, 1.5% zinc, 1.2% iron, and the remainder aluminum. The tensile strength of this alloy will average about 21,000 lb. per square inch and the elongation will be somewhat greater than that of the No. 12 alloy.

Where greater ductility is required, the copper content is reduced to about 5%, giving a tensile strength of about 18,000 lb. per square inch and an average elongation of 3%. This alloy is used for castings such as those for automobile bodies which require to be pressed or bent into their final shape. It is somewhat more difficult to cast than No. 12, because of the lower copper content and consequently higher shrinkage.

Another alloy, which is usually called S. A. E. specification No. 32, contains approximately 12% copper and the remainder commercial aluminum. The high content of copper renders it somewhat easier to cast, as it reduces the solidification shrinkage of the alloy and in general makes for denser and sounder castings. This alloy is used for castings where tightness against leaking is the principal requirement. It has the disadvantage of being quite brittle, because of the large amount of copper.

There are a few special uses that demand special alloys; for instance, commercially pure aluminum is less subject to corrosion than its alloys, but in cast form is too soft for much practical use. For this reason an alloy of 98% commercial aluminum and 2% manganese finds some application since it resists corrosion practically as well as the unalloyed metal, while the small addition of manganese gives the necessary strength and hardness in the castings.

Although most aluminum used is sand-cast, a considerable tonnage is manufactured in permanent molds. In this country the manufacturers of aluminum castings in permanent molds have not so far undertaken the casting of large pieces, but castings up to 150 lb. have been made in chill-molds.

Chill-cast aluminum is used mainly for gas-engine pistons and this has led to the development of special alloys. Permanent molding, though a much newer art than sand-casting, is susceptible of more scientific control. The feasibility with which any alloy can be cast into a chill-mold depends upon the simplicity of design of the desired casting. For casting complicated shapes the alloy selected should be such that its solidification shrinkage is relatively small.

For casting in permanent molds of fairly intricate shapes, such as aluminum pistons and bearing-caps, an alloy containing 10% copper, 1.5% iron, and 0.25% magnesium, and the remainder commercial aluminum, is used extensively. It runs well in the molds and the shrinkage is low on account of the high percentage of copper. Casting this alloy in permanent molds gives, as compared with sand-casting, a finer-grained denser structure with high strength and hardness, making it suitable for wearing or bearing-surfaces and easy to machine.

The most important property of aluminum is its low specific gravity. Next come the relatively high conductivities, both thermal and electrical. This is true not only of the commercially pure metal, but of its light alloys, that is, those containing aluminum as their principal ingredient. In these the properties of aluminum itself, such as specific gravity and conductivity, are dominant, but the mechanical properties can be greatly improved by alloying. Where rigidity is the prime consideration, the figures controlling the substitution of aluminum for ferrous materials are interesting. For instance, the substitution of aluminum for gray-iron can be accomplished with a 50% decrease in weight for a cross-section of equal rigidity.

Aluminum alloys are not used to any great extent for cold-working. Cold-worked aluminum is nearly always unalloyed. The more ductile alloys are fashioned and shaped to some extent in the cold, for instance, in automobile-body work.

The rolling, drop forging, and general hot-working of aluminum alloys have recently undergone considerable development and this has been largely due to develop-

Generated on 2024-09-30 02:07 GMT / https://hdl.handle.net/2027/uiug.30112007837690
Public Domain, Google-digitized / http://www.hathitrust.org/access_use#pd-google
Digitized by Google
Original from UNIVERSITY OF ILLINOIS AT URBANA-CHAMPAIGN

ment of particular alloys. The most remarkable of these is duralumin, which was developed in Germany by A. Wilm in 1903. A series of patents originating in Germany were brought out between the years 1903 and 1914. The composition of the alloy varies somewhat, but the elements essential to the development of the characteristic properties are copper in amounts of 3.5 to 5.5% and magnesium from 0.50 to 1%. Additions are also made of such elements as iron or manganese in small amounts and, in some cases, chromium or molybdenum. Cast in chills and heat treated at 500°C. or above and quenched the alloy shows a tensile strength of 55,000 to 60,000 lb. per square inch and 25 to 30% elongation.

The possible uses for such an alloy are numerous. The rolling of structural shapes and of frameworks for permanent or portable structures will probably soon be developed. Drop-forged duralumin is finding its way into use in the automotive industry for connecting-rods, rocker-arms, gears, and other parts. The fatigue-life of the metal is remarkably long. A sample connecting-rod made in a standard passenger-car was run in a special machine consisting of a motor-driven crank and weighted cross-head. The speed was about 1500 r.p.m. and the load on the cross-head corresponded to 50% overload on the motor. The duralumin rod gave a life of 353 hours and was still intact when a casting on the cross-head failed.

A standard drop-forged steel rod for the same car showed a life of only 25 hours under the same conditions. Another standard steel rod had a life between 40 and 50 hours at normal load. Both rods failed in fatigue at the big end. The steel rods were of smaller section, but about double the weight of the forged-duralumin rod. Some of these rods have also stood up well in block and road tests in the motor to the extent of over 10,000 miles of running. A notable feature of a number of these tests has been that at the big-end bearing, the rod has been run direct on the crank-shaft without any bushing. Forged and heat-treated duralumin, in fact, is proving to be satisfactory bearing-material when the wear is against a sufficiently hard shaft. Rods have been run against both case-hardened and heat-treated shafts. Owing to the relatively high expansion of the aluminum alloys, however, it has been found necessary to allow a little more end-play at the big-end bearings than is standard practice with steel rods.

The Production Engineer and the Manufacturing Plant

By C. F. CLEVENGER

'Increased production!' is the cry heard on every hand at the present time. Particularly, production is the foundation of the manufacturer's success. Increasing production is the production engineer's business. It is what he lives for. Unless he can develop methods by which his clients may increase production, he might as well quit.

Such being the case, what is the attitude of the average manufacturing executive toward the production engineer that calls upon him? Is he anxious to meet the production engineer, not necessarily to sign up with him, but at any rate to talk with him, and to give him time to show that he might be able to effect economies and to increase production in his plant? Or does he class him with peddlers and other pests? Too often, the latter is true. For I am a production engineer, and this article is based on some of my experiences in making my rounds, and studying methods of manufacture.

Frequently when I enter an office and ask for the manager or superintendent, the girl at the desk asks "What do you want to see him about". On receiving my answer, she goes and talks to some other subordinate, and then refers me to some clerk, whose only instructions appear to be "When in doubt, say 'No'". That ends it, and I do not see the manager that day.

Again, at another place, I may be able to run the gauntlet to the manager's private office. After we have talked awhile, he says, "I have an engineering force that takes care of all that". This might be all very well if the engineering force of which he speaks was composed of really high-grade production men and tool-designers, but this is seldom the case. Too often the production man is a so-called 'efficiency expert', whose idea of increasing production is to go out into the shop and tell a machinist to run his lathe faster. As far as planning methods of obtaining efficient output, he simply 'isn't there'.

Even when the engineering force of the plant is composed of conscientious capable men, there is not the incentive to get results that exists with the outside engineer. There is a great temptation for the regular men to follow the comparatively easy routine path. As long as they do their ordinary work conscientiously, their jobs are fairly well assured. The outsider, however, as I have already shown, must get results or go out of business. Furthermore, his work carries him around among the other shops and factories, and he gets many ideas in this way that do not come to the regular force.

It often happens that the production manager recognizes these facts, and would be glad to engage an outside man to design his production tools and fixtures, but the general manager or some other man 'higher up', from a false sense of economy, ties the production manager's hands. The relatively small first cost of the tools overshadows the large saving of time, men, and material.

A workman will expend only about so much energy during the day. Therefore, if his work is made easier by proper tools and fixtures, his output will be correspondingly increased, and without sacrificing quality.

So, when a production engineer asks to see the manager, the manager can well afford the few minutes required for an interview, and and if it appears probable that the production engineer can increase production in the plant, give him a chance to prove it.

Generated on 2024-09-30 02:10 GMT / https://hdl.handle.net/2027/uiug.30112007837690
Public Domain, Google-digitized / http://www.hathitrust.org/access_use#pd-google
Digitized by Google
Original from UNIVERSITY OF ILLINOIS AT URBANA-CHAMPAIGN

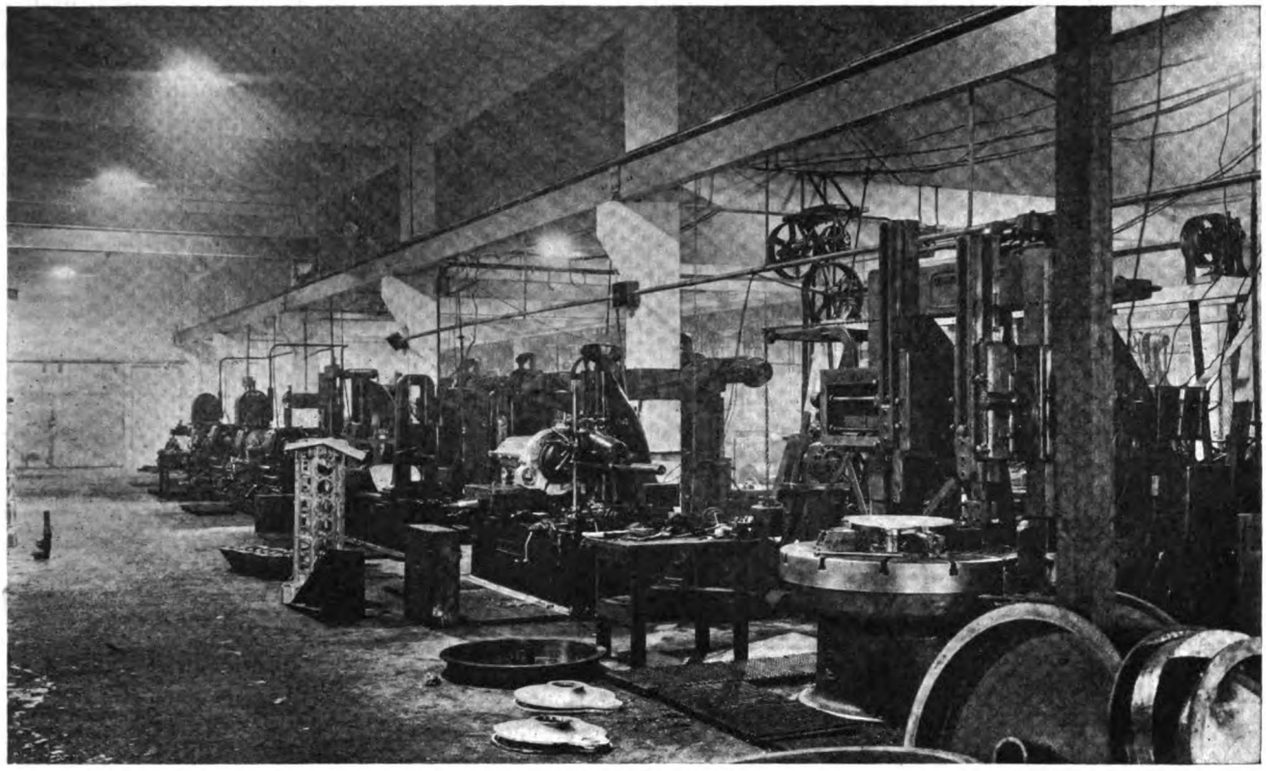

LOOKING DOWN MAIN BAY OF MACHINE-SHOP

Lighting System in the Machine-Shop of the Hall-Scott Motor Car Company

The accompanying illustrations show parts of the machine shop of the Hall-Scott Motor Car. Co., of Berkeley, particularly the lighting system. The principal work done in this shop is the construction of aeroplane, marine, and other high-grade motors, where accurate work is required, and many close measurements are

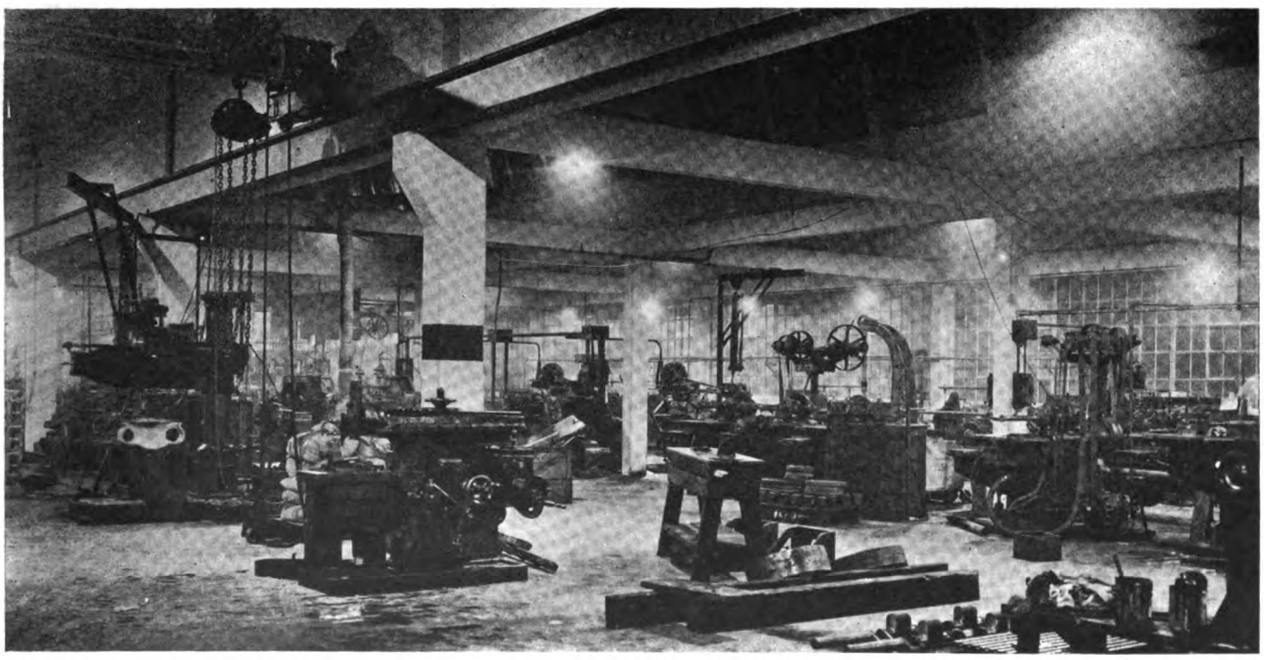

VIEW OF ANOTHER PART OF SHOP

Generated on 2024-09-30 02:13 GMT / https://hdl.handle.net/2027/uiug.30112007837690
Public Domain, Google-digitized / http://www.hathitrust.org/access_use#pd-google
Digitized by Google
Original from UNIVERSITY OF ILLINOIS AT URBANA-CHAMPAIGN

made, rendering it important that the lighting facilities should be the best.

The lighting system was designed by the engineering department of the Westinghouse Lamp Co., and is of the 'general illumination' type. It is designed to provide six foot-candles at the work. Objectionable shadows are eliminated, and at the same time the necessary contrasts are obtained. The illuminating units are 400-watt Mazda C lamps with Cutter R.L.M. dome-porcelain enameled-steel reflectors mounted 19 ft. 6 in. above the floor and spaced 25 ft. centre to centre each way. The illustrations show how thoroughly the light is distributed. More conclusive testimony regarding the effectiveness of the lighting system is, however, given by the statement of the executives of the Hall-Scott company that the efficiency obtained on the night shift is equal to that of the day shift. In other words, the lighting system for all practical purposes, produces conditions at night that are the equal of daylight.

Electric-Steel Plant Established in Brazil

The establishment in Ribeirão Preto of the Cia. Electrica Metallurgica Brazileira, whose object is the operation of a large electric-smelting plant, marks a new epoch in the industrial development of the State of São Paulo. This company, in conjunction with the Empreza Força Luz de Ribeirão Preto, which is to furnish the power, made final arrangements on May 18 for the erection of the plant at Ribeirão Preto, and work will be started as soon as the American contractors that are to construct the mill can get their engineers on the ground. The capacity of the mill will be 60 tons of steel per day, but it is expected that the plant will turn out only about half that amount during the early months of its operation. The ore is to be mined in the southern part of the State of Minas Geraes and will be hauled 75 miles to the mill at Ribeirão Preto, which enjoys easy rail access to the port of Santos, whence ultimate distribution of the finished product will be made. It is interesting to note that the operations of this company in Brazil mark the beginning of the use of electricity for smelting in South America.

WHEREVER there is a man whose hankering for the things of nature takes the form of hanging a fishline in the water at odd moments of leisure, the following directions for removing a fishhook, inadvertently imbedded in his person, should be memorized by him or else pasted in his hat. The advice is issued by the United States Public Health Service and is prefaced by the caution, "If a physician is available it is best to cut the line from the hook and entrust its withdrawal to an expert."

Continuing, the directions, which have been published in one of the American Red Cross bulletins, lay down the following first-aid principles:

"When the barbed end of a fishhook has entered the flesh, do not attempt to remove it by pulling it directly out. Such a procedure will cause great laceration and tearing of the tissues. The better plan is to depress the shank of the hook, push the point forward and onward in an upward direction and bring it out on the surface at another point. The barbed end is then cut off with a wire-cutter or file. The barbed end having been removed, the hook can be extracted by pulling on the shank without damage to the tissues or to the temper of the victim.

Steel-Ship Construction in Argentina

A new phase in Argentine shipbuilding developed with the launching on May 8 of the first locally-built steel ship, the 'Segundo', which is to be used in the European service as a grain-carrier. This craft was originally a German dredge, but was re-constructed and lengthened at the Riachuela yards into a twin-screw steamer of 1350 net tons. The 'Segundo' is built entirely of steel, is equipped with triple-expansion engines, and is expected to develop a speed of 10 knots per hour. There is considerable local interest in the development of a national merchant marine for Argentina, and doubtless the success of the 'Segundo' will lead to further work on steel ships.

THEY were hanging a man named William Hoskins in Kentucky years ago, and a representative company of citizens had gathered to witness the event, writes Bruce Barton in Collier's.

"Have you anything to say to the folks, Bill, before the end?" the sheriff asked.

Bill shook his head.

At this moment a strong clear voice spoke up from the outskirts of the crowd. Everyone recognized the speaker as Joe Taylor, a politician and campaign orator. "If you don't want to talk, Bill," Taylor shouted, "would you mind letting me use your time to tell these folks why they should vote for me for State senator on November 5?"

The condemned man turned a world-weary face to the sheriff. "Who's that?" he asked.

"That's Joe Taylor," she sheriff responded.

"Joe Taylor, the politician?"

"Yes."

"The fellow that makes them patriotic speeches?"

"That's the one."

"I thought so."

A smile of peace and resignation lighted the doomed man's features. It was as if he realized for the first time that even death has its great and glorious compensations.

"Let Taylor talk," he said. "Give him my time; give him all the time he wants. But don't forget to hang me first."

Generated on 2024-09-30 02:12 GMT / https://hdl.handle.net/2027/uiug.30112007837690
Public Domain, Google-digitized / http://www.hathitrust.org/access_use#pd-google
Digitized by Google
Original from UNIVERSITY OF ILLINOIS AT URBANA-CHAMPAIGN

Manufacture of Seamless Steel Tubing

The manufacture of seamless-steel tubes is perhaps the youngest important special branch of the steel industry. While useful welded tubes were made as early as 1812, the present modes of making seamless steel tubes date back less than half a generation, their success having hinged largely upon the development of a suitable quality of steel. What seems to be the first attempt to make seamless tubes appears in 1837, under the English patent of Hanson. This provides a thick short cylinder of cast-steel, which was raised to a high temperature and placed in a matrix, and then, by means of a hydraulic ram, the metal was squeezed through a small orifice around a punch, a seamless tube being the result. This method, with a few modifications, was again patented, in England, in 1867. A similar process was patented, under Elliott, in 1882. Under this specification, plastic or molten steel was to be forced hydraulically through a suitable orifice so that a tube with fibres arranged helically would be produced. The swedging mill patented by Church & Harlow, in England, in 1841, and modified by various subsequent patents, had in view a more economical means of lengthening hollow billets of cast or drilled steel, preparatory to cold drawing. Sometimes solid bars of steel were drilled from end to end to make a tube-shape suitable for the cold-drawing operation, but this process was slow and expensive. One of the first attempted processes, while not successful for small tubes, has since been satisfactorily developed for tubes larger than 5 in. outside diameter.. This is the 'cupping' process, which consists in pressing a cup or cap from a flat plate and progressively elongating it into a tube by decreasing the diameter while it passes through a series of reducing dies.

All of these early processes had their limitations. In making seamless tubes from cast-steel cylinders, it was found that the material was not always homogeneous, and developed blow-holes while being drawn. Furthermore it was not uniform in hardness and texture. The drilled bars were expensive, and the cupped plates did not per-

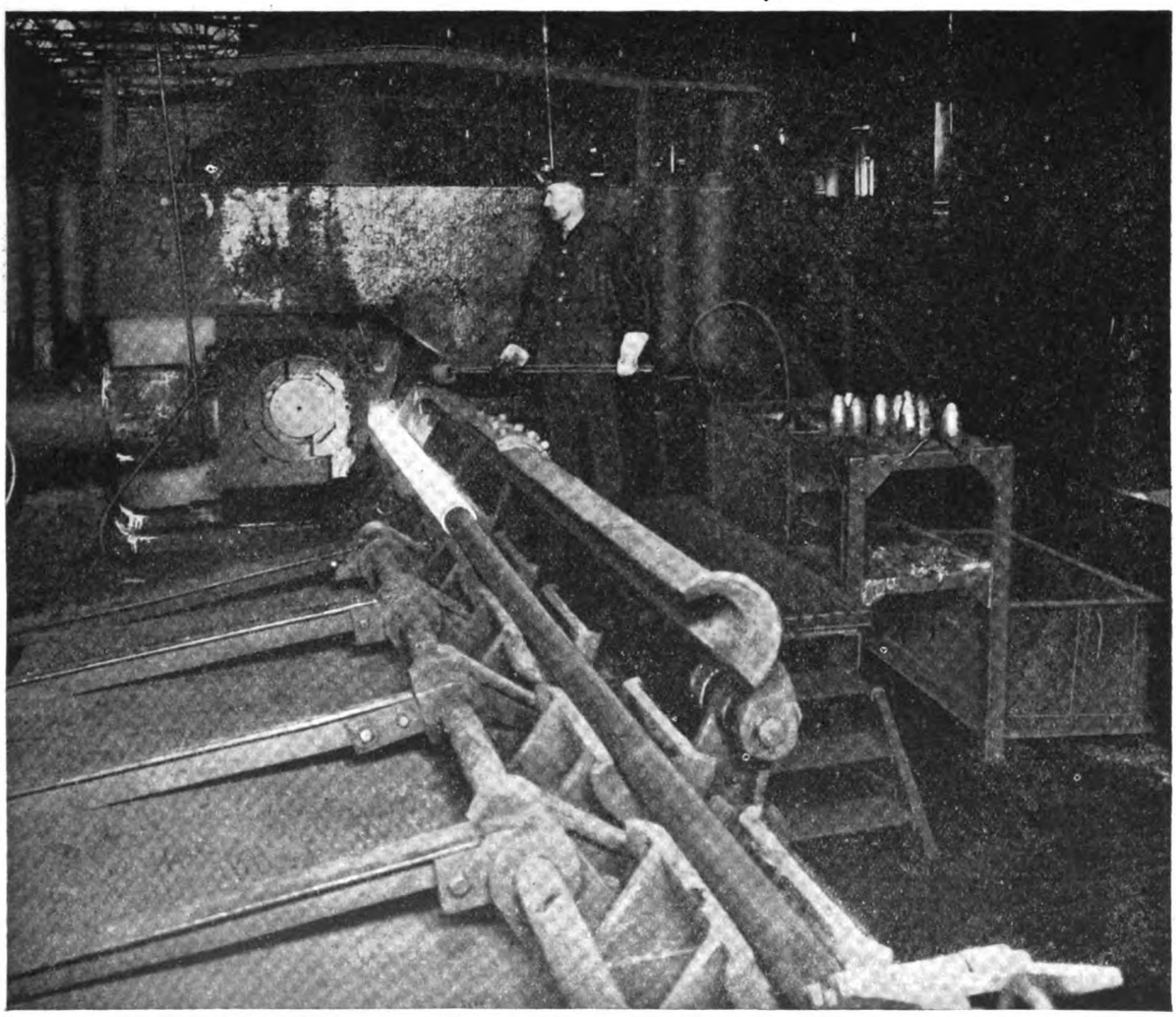

ROUGH TUBE COMING THROUGH PIERCING-MILL

Generated on 2024-09-30 02:15 GMT / https://hdl.handle.net/2027/uiug.30112007837690
Public Domain, Google-digitized / http://www.hathitrust.org/access_use#pd-google
Digitized by Google
Original from UNIVERSITY OF ILLINOIS AT URBANA-CHAMPAIGN

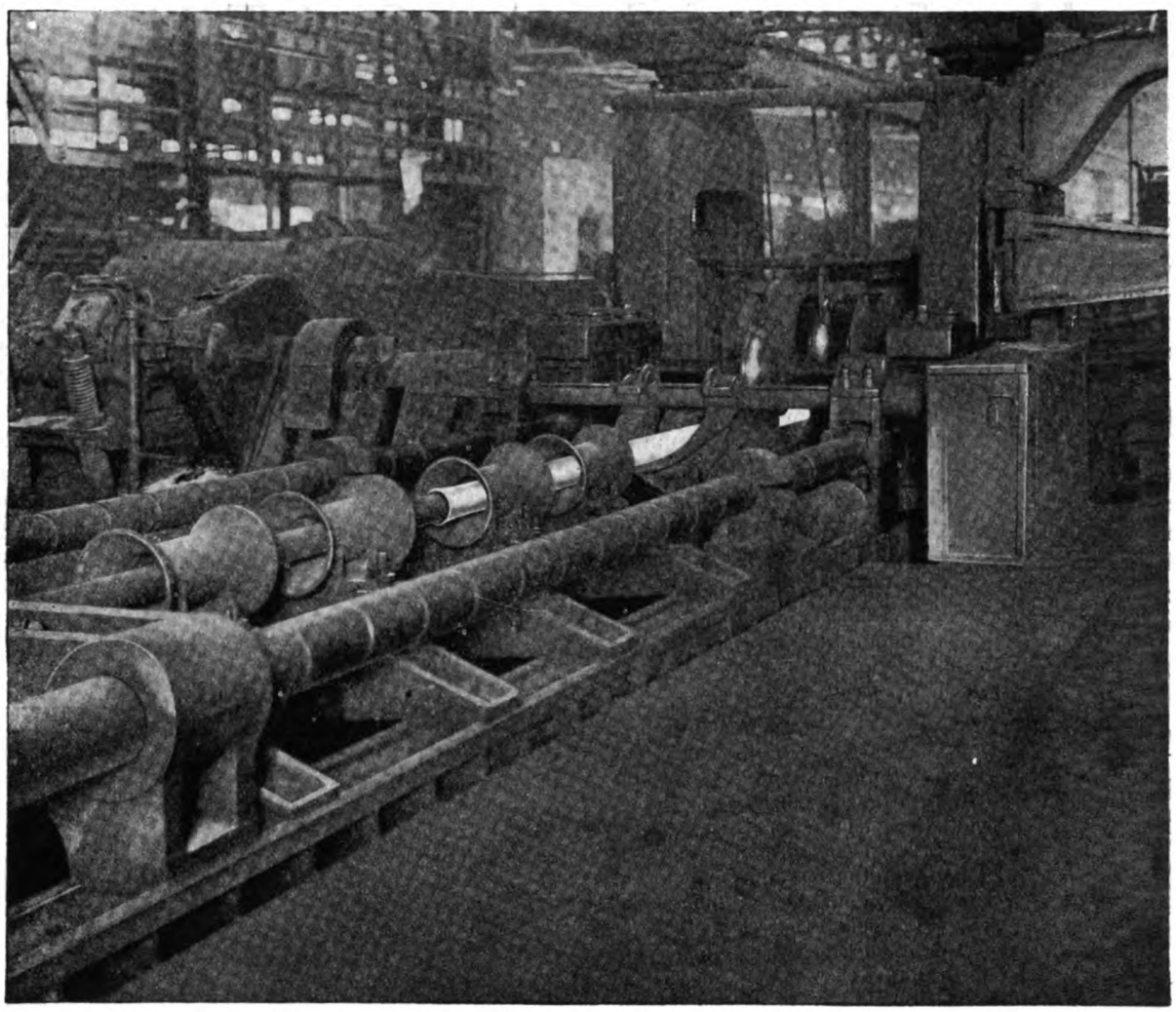

ROUGH TUBE PASSING THROUGH ROLLING-MILL

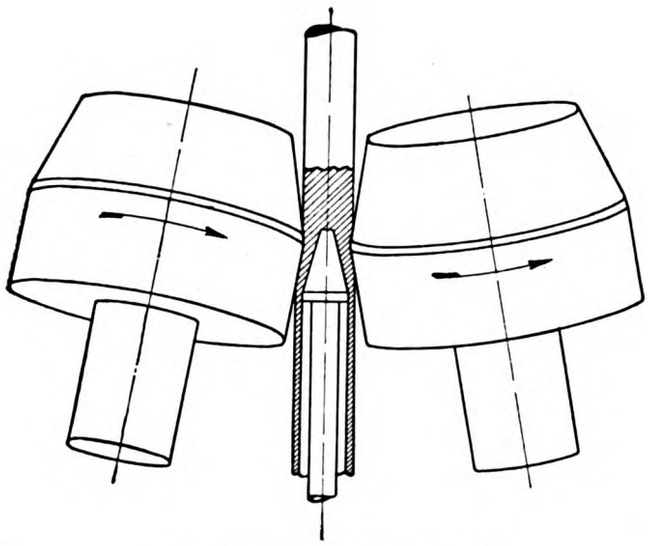

DIAGRAM OF PIERCING-OPERATION

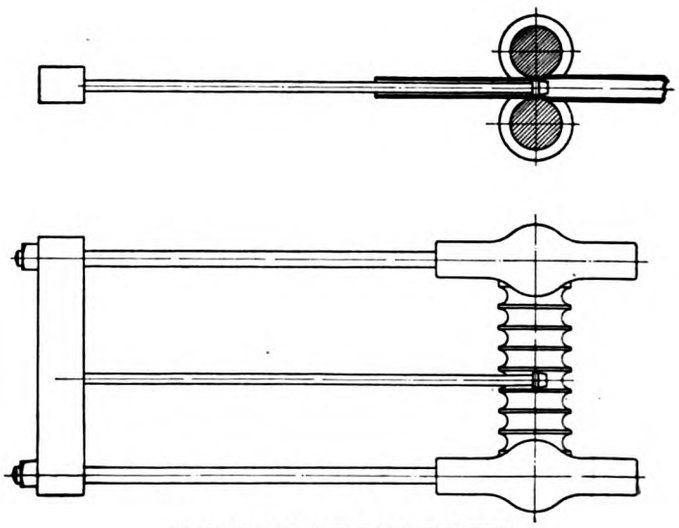

DIAGRAM OF ROLLING-OPERATION

Generated on 2024-09-30 02:11 GMT / https://hdl.handle.net/2027/uiug.30112007837690
Public Domain, Google-digitized / http://www.hathitrust.org/access_use#pd-google
Digitized by Google
Original from
UNIVERSITY OF ILLINOIS AT
URBANA-CHAMPAIGN

mit the manufacture of tubes in all desired commercial lengths and thicknesses.

Twenty-five years ago seamless steel tubing from the first operation to the finished tube was not being made in the United States. While many tubes were being drawn cold for bicycle purposes, the billets which were being used were prepared and partly finished into tubes in England and Sweden. As long as the piercing operation was left undeveloped, it was a simple and relatively inexpensive matter to start a seamless-tube plant, and the natural result was a draw-bench or two here and there in the manufacturing sections, where tubes were made to meet the steadily increasing demand.

In the manufacture of Shelby seamless tubes by the National Tube Co., the steel is delivered to the furnace in blooms of several sizes and weights, some of these being 6, 7, 8, and 10 in. square, about 11 ft. long, and weighing 1300 to 3750 lb. After the blooms have been inspected for surface defects, and any irregularities chipped off with pneumatic chisels, they are conveyed to the furnace-

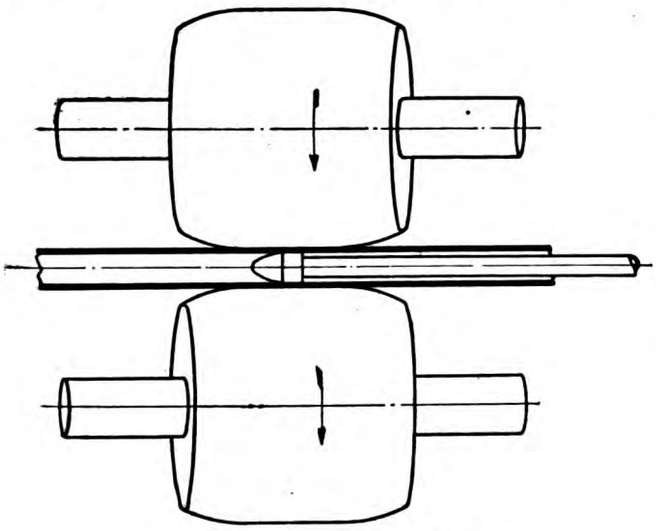

DIAGRAM OF REELING-OPERATION

room where an electrically operated charging-mechanism places them in the furnace.

When the proper temperature for rolling has been reached, the bloom is pulled from the furnace by the long arm of the crane or transfer mechanism and placed upon a small electric buggy; this buggy transfers it to the rolling-table of the bar-mill where it passes through a series of rolls, which changes the square bloom into a round bar of smaller size and greater length. Different sizes of round bars are thus rolled according to the size of tubes required to be made from them. Some of the bars are 8 in. diam. when finished, while others are as small as 3 in. While still at rolling-heat, the round bars are cut to different weights, according to the length and wall thickness of the finished tube, by a circular saw, and centred while still hot. They are then allowed to cool, after which they are inspected, marked with a die to identify the steel, and sent to the piercing-mill.

The bars are now known as billets, or 'rounds', and contain just enough metal for making tubes of the desired length, thickness, and diameter, and to compensate for normal losses incident to manufacture of the tube. The first operation in making a seamless tube from the billets, or 'rounds', is known as 'centering'. In this operation, which is performed by a pneumatically operated machine while the billet is still hot from the rolling-mill, an indentation is made in the centre of one end of the billet by a punch, in much the same manner as preparation is made for drilling holes in metal by centre-punching. The cavity, or countersink (about 1 in. deep), thus produced insures proper starting of the hot billet in the piercing operation, permits insertion of the piercing-point at its most effective position in relation to the piercing-rolls, and facilitates an equalized displacement of metal from the centre of the billet.

After the billets have been centred, inspected, and marked, they are placed in a heating furnace of special construction. The bottom of the furnace is inclined, and centred billets of the proper length are fed into the upper and cooler end, from which they roll by gravity to the lower end, where the temperature is high enough to render the steel soft and semi-plastic. The piercing-mill is close to the discharge-end of this furnace and the billets are fed into it, centred end foremost. The solid billet, almost white-hot, is pushed forward until it is caught by the revolving rolls of the piercing machine which force it over the piercing-point of a mandrel. So powerful are the revolving rolls of the piercing-machine and so carefully planned is each part of the machinery, that the billet is transformed into a tube with apparently the same freedom as a lump of dough would be manipulated by a pastry-cook.

The newly pierced billet is simply a rather rough, thick-walled, seamless tube. It is raw in appearance and is likely to be far from true to size. It retains the knurl-marks of the piercing-rolls on its battered surface. But it is without seam or weld, the round bar of steel having been pierced quite through its length, as a potter would force a pointed rod through a cylindrical mass of moist clay. It is short, because of the thickness of its walls, and to change this thickness into length is the next requirement. Accordingly, it is rolled through adjustable rolls and over a mandrel held in the roll-groove by a long steel bar where the wall thickness and diameter are reduced. In this manner it is converted into a longer tube with walls of uniform thickness having a fairly smooth finish. While still at suitable working-temperature, the rolled tube passes through the reeling machine. This is another form of rolling machine, consisting of two heavy rolls of special design, set with axes askew, which may be adjusted to a thousandth of an inch. As the tubes are fed through these rolls, any mill-scale is removed and they are given a smooth burnished surface, and the outside diameter of the tube is corrected to some extent. From the reeling machine, the tubes pass to the sizing or finishing rolls, which give the exact outside diameter required.

From the finishing rolls, the tubes travel to an inclined

Generated on 2024-09-30 02:08 GMT / https://hdl.handle.net/2027/uiug.30112007837690
Public Domain, Google-digitized / http://www.hathitrust.org/access_use#pd-google
Digitized by Google
Original from UNIVERSITY OF ILLINOIS AT URBANA-CHAMPAIGN

cooling-table, up which they slowly roll, and after being sorted and inspected are dropped into racks, ready for removal by electric cranes. The cranes transfer the hot-finished tubes to cutting-off machines where the rough ends are trimmed from the tubes and the tubes cut to proper length. Any slight straightening necessary is then done and the final inspection made.

Tubes which have passed through the operations so far described are known as hot-finished tubes. The term 'hot-finished' is used to distinguish these tubes from hot-rolled tubes that are intended for cold drawing to smaller sizes. When tubes are 'hot-finished' they are ready for use without further treatment in the mill, and all operations are performed on the tube before it becomes cold, thus differing from the manipulation of cold-drawn tubes, which are allowed to cool to atmospheric temperature before reaching the draw-benches.

Hot-rolled tubes that are to be cold-drawn are given the same piercing, rolling, reeling, and sizing operations as tubes that are to be hot-finished. The first operation preliminary to cold-drawing, is pointing the tubes. One end of each tube is heated and then pointed in swaging dies under a power-hammer. Pointing the tube furnishes a 'bait', which is grasped by the heavy tongs of the draw-bench in which the tube is to be cold-drawn. In this way an even distribution of the pulling force is effected when drawing the tube through the die.

Before tubes can be cold-drawn they are pickled in an acid bath to cleanse them and to free them from mill-scale. While the operation of cold-drawing is simple in principle, expert mechanical supervision is necessary to secure uniform accurate results. The operation is practically the same for steel tubes as it is for brass and copper tubes. The apparatus used consists of a heavily constructed steel draw-bench, in the centre of which is placed the die through which the tube is to be drawn. A heavy square-linked endless chain runs over a wheel placed underneath the die, and travels along the top of the bench for a distance of from 15 to 40 ft. to a sprocket, which is geared to a suitable source of power. The chain returns underneath the draw-bench.

In operation, a hot-rolled tube (now perfectly cold) is inserted in the die with its pointed end projecting through it. A workman slides a mandrel into the tube from the opposite end, and an operator seizes the pointed end of the tube with heavily constructed tongs which run

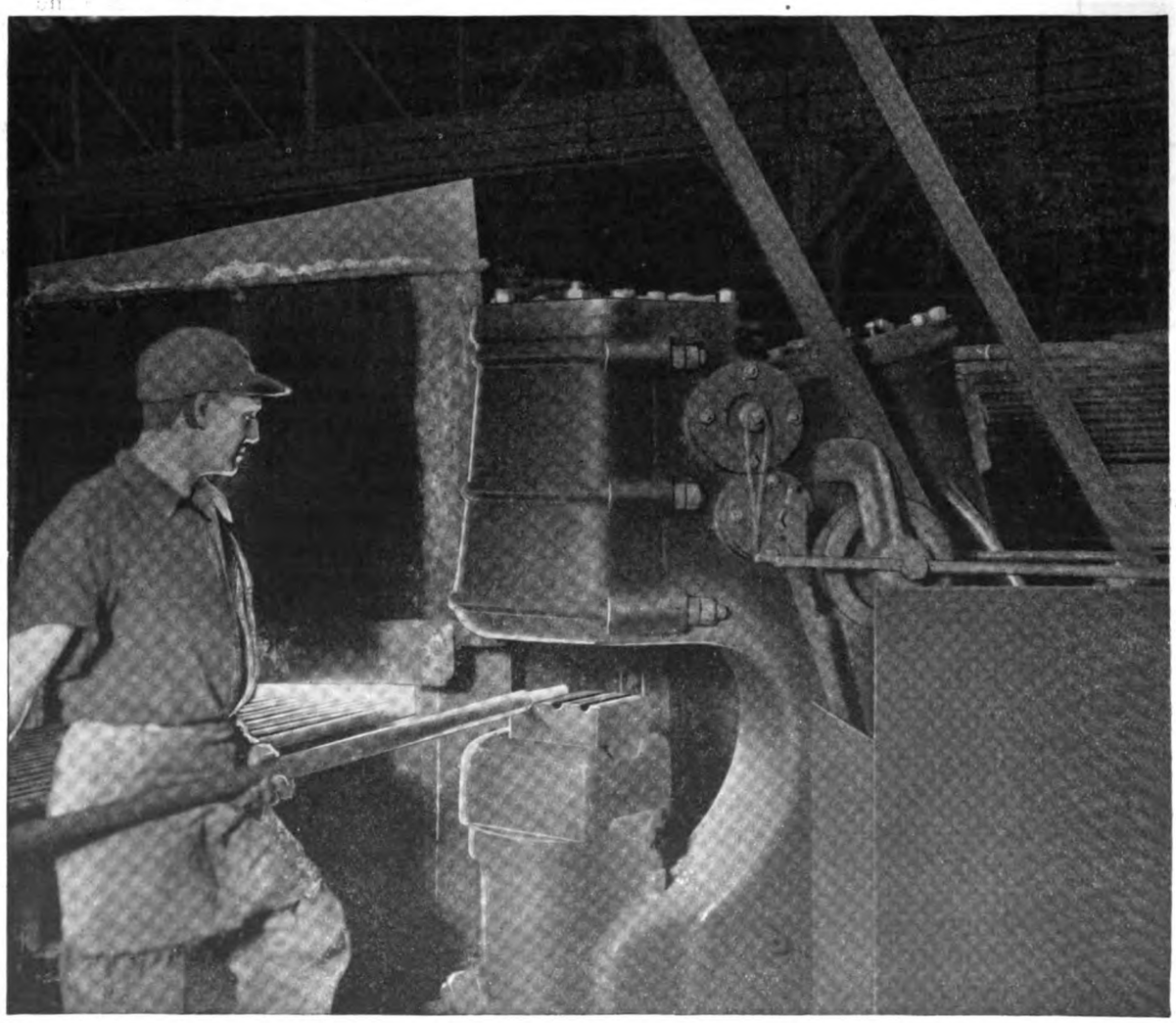

POINTING TUBES FOR COLD-DRAWING

Generated on 2024-09-30 02:12 GMT / https://hdl.handle.net/2027/uiug.30112007837690
Public Domain, Google-digitized / http://www.hathitrust.org/access_use#pd-google
Digitized by Google
Original from UNIVERSITY OF ILLINOIS AT URBANA-CHAMPAIGN

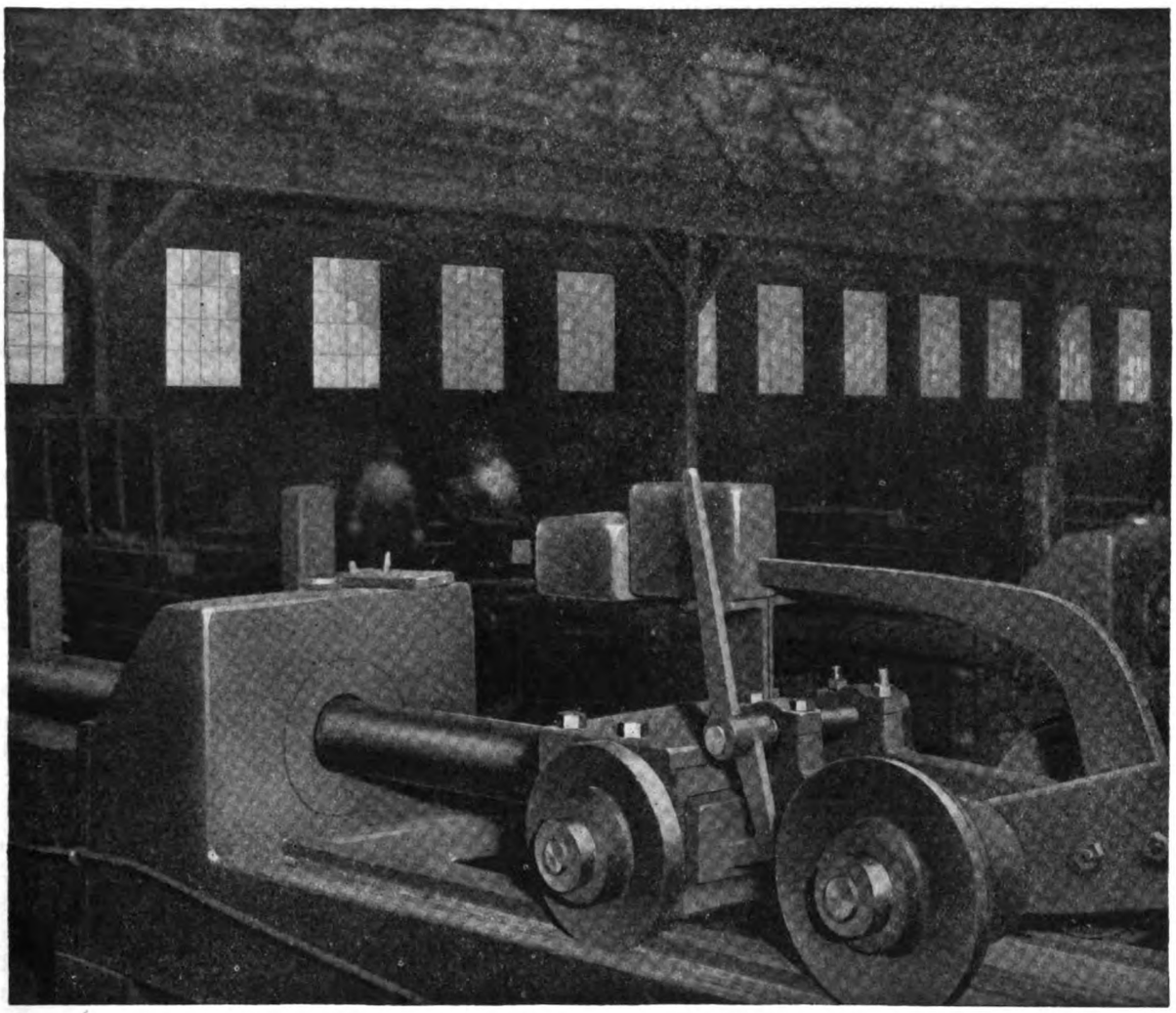

TONGS OF DRAW-BENCH PULLING TUBE THROUGH DIE

on wheels along the bed of the draw-bench. The tongs have a strong hook that catches on the traveling chain. The tube is drawn through the die, or between the die and the mandrel previously inserted. All tubes except

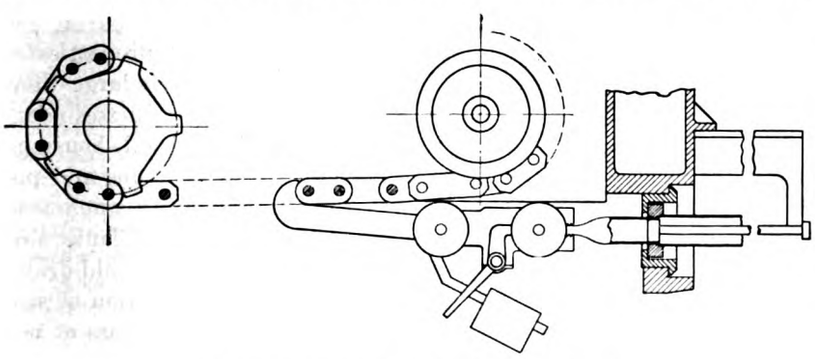

DIAGRAM OF COLD-DRAWING OPERATION

those of ½ in. inside diameter and less, and those in which the wall is heavy relative to the diameter are drawn over mandrels. The mandrel is kept in position by a long bar, which goes inside of the tube and holds the mandrel even with the die while the tube is being drawn. Dies are made from crucible-steel, and are machined to the thousandth of an inch, to govern the outside diameter of the tube that is to be drawn. Shelby tubes are drawn from two to twenty times through dies of varying diameter to obtain the required dimensions. Some tubes are drawn still more by the manufacturing consumer.

After the tube receives the final pass through the dies, which brings it to the desired outside diameter and thickness, the point is cut off and the tube passes to the annealing furnaces. Cold-drawing makes the tube hard and brittle, and, therefore, after each cold-drawing pass it is necessary to anneal the tube in order to make it soft enough to withstand further drawing. The process of annealing forms scale on the tube, and this must be removed by pickling, otherwise the scale would scratch the tube and score the die on subsequent cold-drawing passes. After the last cold-drawing operation, the tube is subjected to one of various anneals, according to the use for which it is intended. The tube then passes to the straight-

Generated on 2024-09-30 02:10 GMT / https://hdl.handle.net/2027/uiug.30112007837690
Public Domain, Google-digitized / http://www.hathitrust.org/access_use#pd-google
Digitized by Google
Original from UNIVERSITY OF ILLINOIS AT URBANA-CHAMPAIGN

ening machines, where any deviations from straightness are corrected. These straightening machines are of different types, some of them based on a planetary system of roll-rotation, others consist of horizontal and vertical rolls together, and still others being simply presses designed for the purpose. In the two first-mentioned types, the straightening of the tube is practically automatic, while the human element enters to some extent in straightening tubes with the pressed type of machine. Small tubes are sometimes straightened by hand in a bending-rack, the workman's eye and expert judgment being the main factors in securing the result.

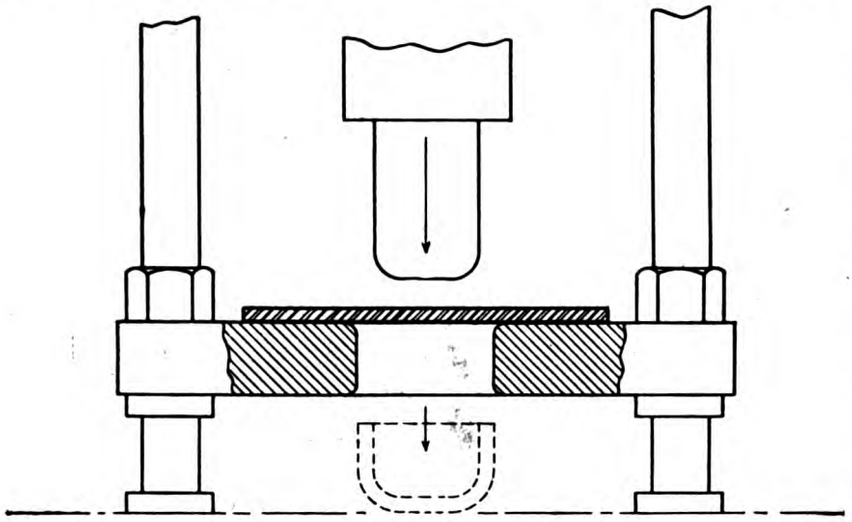

DIAGRAM OF FIRST CUPPING-OPERATION

Shelby tubes, in diameters up to and including 5½ in., are made by the piercing process already described, tubes 5½ to 9¼ in. diam. can be made by either the piercing or cupping process, while for tubes larger than 9¼ in. the cupping process is generally employed. By the cupping process, heavy-walled tubes are made from square plates of steel, which are practically the same as would be obtained by the piercing of solid billets, if this were feasible.

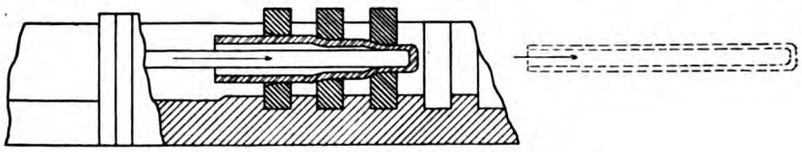

DIAGRAM OF HOT-DRAWING OPERATION

However, to obtain a seamless tube, say 20 in. diam., from a solid billet of steel, would necessitate rolling and piercing machinery of unwieldy proportions, and to drive such machinery would require tremendous power. However, tubes 20 in. diam. are seldom required in lengths greater than 10 ft., and for such lengths the cupping process can be more economically and advantageously employed.

The steel plates are made from the same grade of steel as are the billets for the smaller sizes, and are delivered to the heating furnace in squares varying in thickness from ⅜ to 4 in., and from 2 to 7 ft. square.

The square plates are heated and the corners sheared to produce circular plates, or disks. They are then passed to a hydraulic press, where they are punched into rough shallow cups. The cups are again heated and punched through a smaller die to elongate them and at the same time to reduce the diameter.

After a plate, or disk, has been formed into a cup of suitable dimensions, it is re-heated and drawn through a series of dies in a horizontal bench. This apparatus consists of a heavy cast-steel frame, or body, provided with a hydraulic plunger which can operate through the full length of the bench. Punches of various sizes are placed on the end of the plunger, according to the size of tube desired, and dies of successively decreasing diameter are dropped in recesses in the bench-frame in positions so that the heated elongated steel cup may be forced through them one after another by the punch. Inasmuch as the reduction of diameter and walls is limited for each heat, a cup may be heated and drawn as many as twelve times before it is a finished tube.

The plate has now passed into tubular form, and the original head, or the bottom of the 'cup', forms but a small proportion of it. Subsequent hot-drawing operations may be necessary to produce a tube with a smaller diameter, a thinner wall, or a greater length. Finally the head, or closed end of the tube, which remains until the last operation is completed, is cut off, the tube is inspected and tested hydrostatically, and the process is finished. If the tube is to be used in making seamless-steel cylinders, the head is left to form the bottom of the cylinder, or a special type of head can be made by spinning, welding, or other operations.

Hot-drawn tubing is extensively used in place of castings, forged parts, and solid stock. The physical properties of the material and the relatively large diameters and range of wall thicknesses adapt it for such uses as formed axle-housings, shaft-casings, cylinders, columns and pistons of hydraulic and other apparatus, compressed-air containers, retorts, gear-ring blanks, and for other purposes where hot-finished or cold-drawn tubing would be unsuitable because of limitation of size, gauge, and possible extra cost of the latter class of materials in large quantities.

"HANG it! man; if your flivver has been stolen, why don't you ring up the police?

"I'm not worrying about the car. I'm wondering how they made the blamed thing go."—'Harpers Magazine.'

Generated on 2024-09-30 02:16 GMT / https://hdl.handle.net/2027/uiug.30112007837690
Public Domain, Google-digitized / http://www.hathitrust.org/access_use#pd-google
Digitized by Google
Original from UNIVERSITY OF ILLINOIS AT URBANA-CHAMPAIGN

INDUSTRIAL EQUIPMENT

IMPROVEMENTS IN BULK-CARGO HANDLING

In the past four years several factors have stimulated interest among shippers of heavy bulky materials in a cheaper and more rapid scheme of handling such commodities. The manufacturers of apparatus, especially the pioneers in this line, started a movement in this direction some twenty years ago, and succeeded in getting a limited number of plants installed as early as 1902. The development of plants for handling large tonnage of coal and iron ore was the most obvious necessity and it was naturally the first problem attacked on a large scale. The necessity for such development centred around the Great Lakes region and the first plants were built in this vicinity. The short season of navigation from the Minnesota, Wisconsin, and Michigan mining districts to the blast-furnaces of the lower lakes and the Pittsburgh district, requires a movement of a twelve-month supply of ore in about seven months. The coal supply of the States bordering on the iron-ore region was largely taken from the lower lakes on the return trip of the same boats. In order to perform this task with the minimum operating costs, it was necessary to provide machinery for cheap and rapid discharge of cargo from ship to dock or railroad, and vice versa, the length of time the ship was tied up to the dock being a vital factor in costs. The result has been a high state of development and concentration of bulk cargo handling plants in the Lakes region. In the late nineties the Wellman-Seaver-Morgan Co. brought out its ore-unloader, each machine capable of handling ore at a rate from 500 tons per hour, upward.

A recent contract with the Lehigh Valley Railroad Co. covers an automatic ore-unloader carrying a 15-ton clamshell bucket on the unloader leg and designed to make a complete cycle or round trip in 50 seconds. The machine electrically operated throughout is shown above.

The unloader consists of a main framework mounted on trucks which travel along the runway-rails that are placed approximately as shown in the illustration. The main framework extends back beyond the rear runway over a temporary storage pile where the ore can be discharged if desired. It is then picked up by the ore-bridge and carried to the stockpile. Between the front and rear runways, space is provided for railroad tracks where ore-carrying cars are placed under the machines and loaded with ore for transportation to the furnaces. The girders of the main framework form a support for runway-rails, on which a trolley travels. This trolley supports a balanced walking beam, from the outer end of which a stiff bucket-leg depends. At the lower end of this leg is the bucket, which is operated by machinery placed on the walking-beam. All horizontal movements of the bucket are accomplished by moving the trolley backward and forward on the girders. The vertical movements of the bucket are accomplished by the operation of the walking-beam. The forward portion of the beam being out of balance, the bucket descends by gravity as soon as the brakes of the hoisting mechanism are released.

Only two men are required for the entire operation of one of these machines. One of the operators, whose station is in the bucket-leg directly over the bucket-shells, controls all of the motions of raising and lowering the bucket, of traveling the trolley back and forth, and moving the machine along the dock from one hatch to another. The second operator is stationed in a cab on the larry and from this station he controls the movements of the larry, the operation of the larry-gates, and the weighing of the ore.

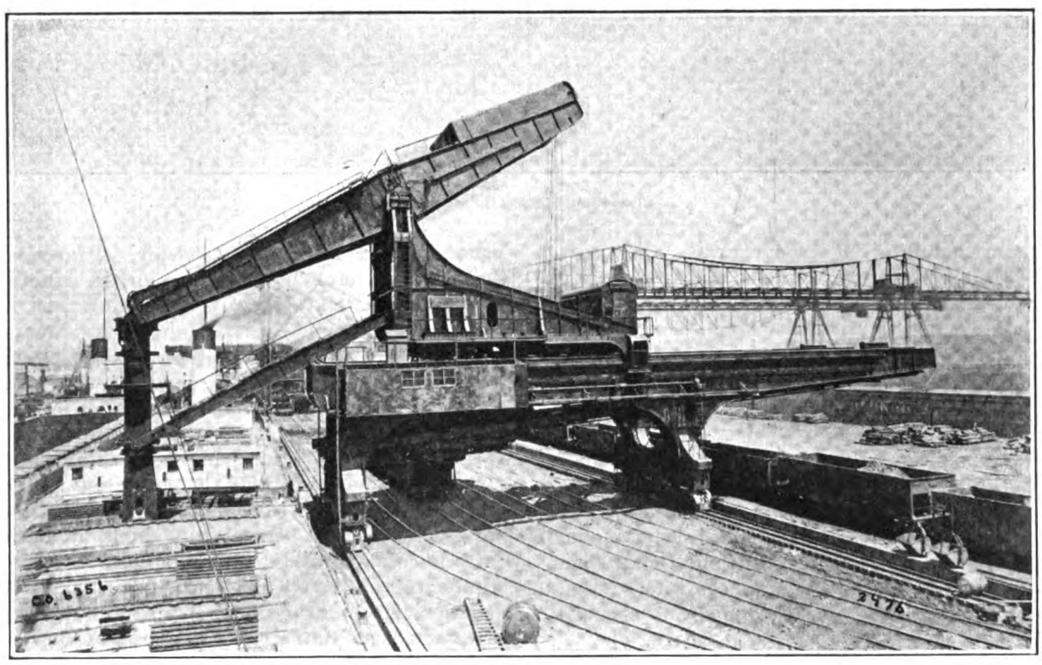

Electrically-Operated Ore-Unloader

Some idea of the capacities of unloading by this method may be derived from a record which was made in Ashtabula by eight machines of this type having a capacity of 15 tons each, unloading seven boats having a total capacity of 70,000 tons in 22 hours actual time. At another point, four machines working in boats having capacities of 13,000 tons have unloaded these cargoes in about three hours and twenty-five minutes.

In addition to the vertical movement, which is given to the bucket-leg by means of the walking beam, it also has a motion of rotation around its vertical axis. This motion is introduced to enable the machine to reach along the keel of the boat and clean up ore between hatches. The distance from point to point of bucket-shells when open is approximately 21 ft. About 97% of the ore is removed from the boat without hand labor. Records of fifty machines in operation indicate that this type of machine will handle ore at

Generated on 2024-09-30 02:08 GMT / https://hdl.handle.net/2027/uiug.30112007837690
Public Domain, Google-digitized / http://www.hathitrust.org/access_use#pd-google
Digitized by Google
Original from UNIVERSITY OF ILLINOIS AT URBANA-CHAMPAIGN

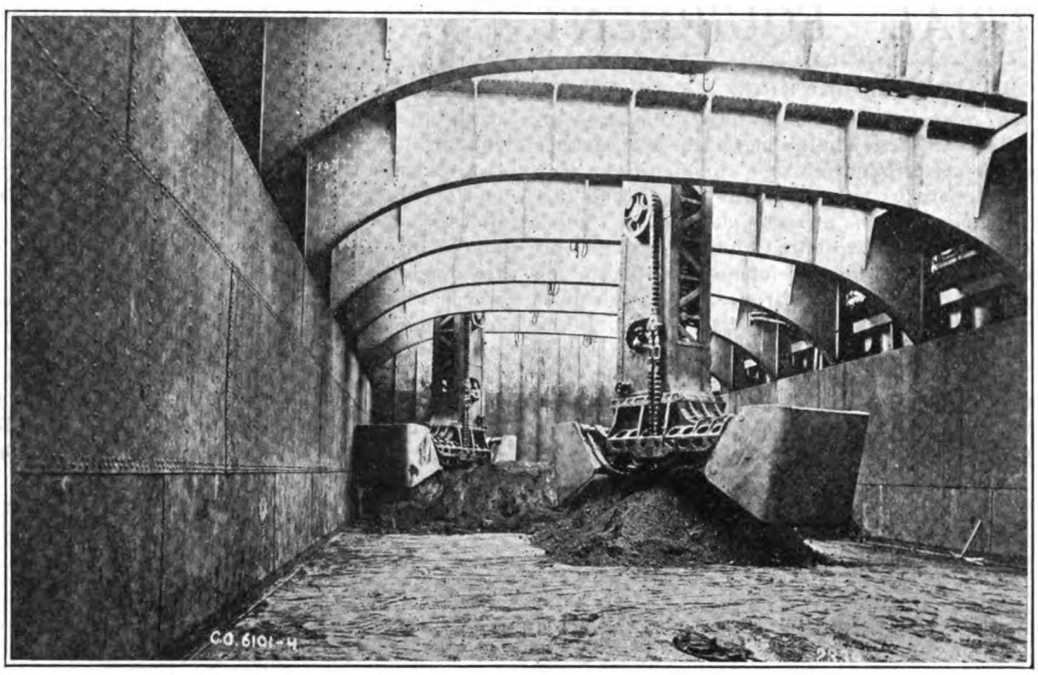

Clam-Shell Bucket in Operation

2¼ to 4½c. per ton including all fixed charges, and records of as high as 783 tons of ore per hour per machine from tie-up to cast-off of boat have been made. The Lehigh ore-unloader will be installed at the Claremont terminals, New York harbor, to handle ore from Chile and Cuba.

TURBINE-GENERATOR UNITS FOR LIGHTING SERVICE

Although developed especially for supplying energy for locomotive headlights, the turbine-generator units just placed upon the market by the Westinghouse Electric & Manufacturing Co. may be used for lighting service in small isolated steam-plants such as pumping-stations, small steam-shovels, oil-well derricks, and in other places where a small amount of light is required. The equipment is especially

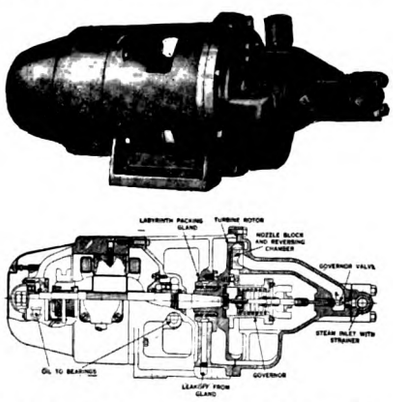

View of Unit and Diagram Showing Interior Construction

advantageous where portability is required, as it is designed for severe outdoor service. This unit is small, light, and compact, requiring no foundations. It can be set on a floor, heavy board, or in any horizontal place, and held in position with four small bolts, studs, or lag-screws.

Although the unit is totally enclosed, all parts are readily accessible by removing the end-cover on the generator, and the turbine-end casing on the steam-end. There are only five moving parts, the shaft carrying the generator-armature and the turbine-rotor, two governor-weights, the governor-spindle, and the governor steam-valve stem, thus making for simplicity of operation. As there are no levers to wear and stick and no packing to adjust and renew, adjustments are unnecessary after the unit leaves the factory. The unit is self-contained. The single shaft carrying the generator-armature and the turbine-rotor with the governor is supported by two standard self-aligning ball-bearings at each end of the armature, the turbine-rotor with the governor being overhung. The generator-end consists of a single casting containing one bearing and the field-poles with windings. To this is bolted the middle section, which carries the second bearing and holds by a web, half of the turbine-rotor housing. This middle section supports the whole unit. The steam-space, governor-valve, and steam-strainer are contained in the third or turbine casting. This arrangement eliminates all chance of temperature distortion, prevents leakage of steam to the generator, and gives a rugged perfectly balanced unit.

CUTTING WIRE ROPE

Proper provision for the protection of human life in mines demands frequent and regular inspection of hoisting cables by responsible persons and the employment of approved processes in effecting needed repairs. A section devoted to 'hoisting ropes' in the draft of a law to cover mine rules and regulations, proposed by the United States Bureau of Mines, is evidence of the extent to which the cutting of wire rope is now required in the maintenance of mine equipment.

The approved method of cutting the rope preparatory to re-socketing and re-clamping is the well-known oxy-acetylene process. There is no simpler or easier way. A typical outfit that has been found dependable comprises a standard 'Oxweld' cutting blow-pipe, a Linde oxygen cylinder, and a tank of 'Prest-O-Lite' dissolved acetylene. With this equipment a competent operator cuts through a two-inch cable in just about two minutes. The cutting apparatus is portable, so that it may be easily set up anywhere at a moment's notice.

The saving in time and expense in the cutting of rope may very profitably be extended to discarded rope, which may be reduced to lengths for use in other ways. By adding the welding blow-pipe to the equipment noted above the

Generated on 2024-09-30 02:09 GMT / https://hdl.handle.net/2027/uiug.30112007837690
Public Domain, Google-digitized / http://www.hathitrust.org/access_use#pd-google
Digitized by Google
Original from UNIVERSITY OF ILLINOIS AT URBANA-CHAMPAIGN

mine is provided a complete outfit for the speedy repair of broken machinery, making it unnecessary to depend on machine-shop repairs or costly replacements.

SELF-CONTAINED MOTOR-DRIVEN TOOL-GRINDER

Ease of starting and total enclosure of motor and control apparatus are the features of the motor-driven tool-grinder just placed upon the market by the U. S. Tool Co., of Cincinnati, Ohio. The grinder shown is equipped with a 5-hp. direct-current, shunt-wound, adjustable-speed, 1120 to 1600-r.p.m., 230-volt Westinghouse motor, started or stopped from a push-button on the top of the motor-frame. This push-button actuates a type C Westinghouse starter with a

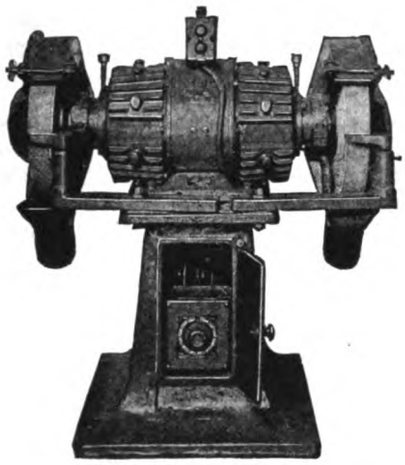

Motor-Driven Tool-Grinder

speed-adjusting rheostat, all placed in the bottom of the machine-frame.

The reason for mounting the push-button on the top of the motor-frame is interesting. On machines previously designed of similar type, these push-button stations were mounted directly in front of the motor-frame, but it was found that workmen using these grinders would start the motor by 'jabbing' the button with the material they intended to grind. With the new position for the button it is easier for the workman to operate it with his hand than with the tool, which naturally prevents misuse.

USE OF GRINDING IN THE MANUFACTURE OF THE PHONOGRAPH*

Grinding with the Norton wheel is an important factor in the manufacture of both phonograph and the ediphone by the Edison company, for without the delicacy of this machining process on the 200 parts that compose the intricate instrument for reproducing the beauty of sound, the exactness of the reproduction would be practically impossible. Moreover, it would not be possible to produce this modern sound-device in the large numbers demanded by the public were it not for the speed and economy with which grinding can produce the finished component parts. Precision-grinding plays an important part in the making of every one of the parts comprising the mechanism, horn, reproducer, and the muting device.

Fig. 1 shows the first operation performed on the disc top-plates, snagging the ends with a crystolon 24-in., 3-in. face wheel, grain 24, grade R. The wheel revolves at a surface-speed of 5300 ft. per minute and 52 pieces are produced per man every hour. On the second operation on disc top-plates—the 'cleaning up' of the top—a crystolon wheel 12 in. diam. and 2-in. face, grain 60, grade S, is used and is given a surface-speed of 5000 ft. per minute. A fine-grain wheel is necessary on this operation to secure a suitable surface for japanning after one buffing operation.

Fig. 2 shows the first polishing operation on the reproducer-horn necks, which are made of sheet brass. A 10-in. diam., 2¼-in. face, rag-wheel is used, coated with No. 90 alundum grain. The wheel is revolved at 2000 r.p.m., corresponding to a surface-speed of 5200 ft. per minute. Each operator produces 15 or 16 pieces per hour.

Fig. 1. Snagging Ends of Disc Top-Plates

Fig. 2. Polishing Reproducer-Horn Necks

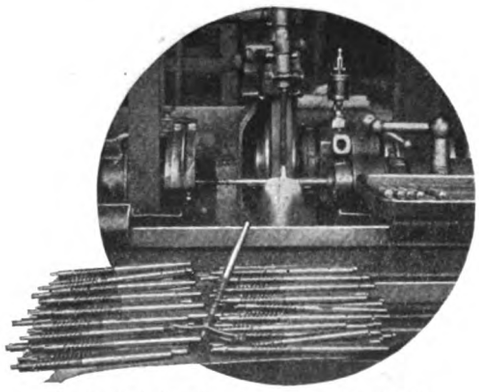

Fig. 3. Grinding Taper on Turntable Spindles

An operation of particular interest is the grinding of the worm, an important part of the phonograph. An alundum wheel, grain 60, grade N, 12 in. diam., 1-in. face, has been found to be most suitable. About 0.011 in. of material is removed and the diameter is ground to 0.3125 in. within limits of ± 0.001 in. Automatic longitudinal and cross-

*From 'Grits and Grinds'.

Generated on 2024-09-30 02:10 GMT / https://hdl.handle.net/2027/uiug.30112007837690
Public Domain, Google-digitized / http://www.hathitrust.org/access_use#pd-google
Digitized by Google
Original from UNIVERSITY OF ILLINOIS AT URBANA-CHAMPAIGN

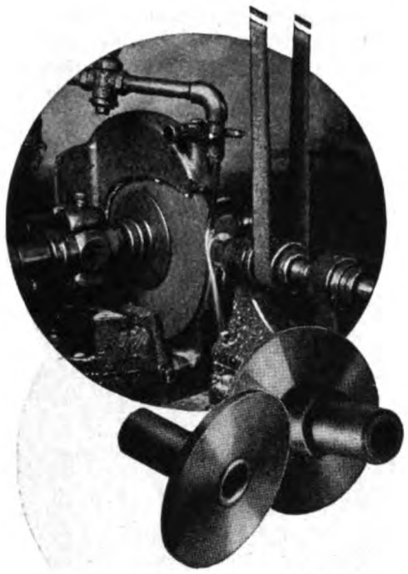

Fig. 4. Grinding Governor-Disc

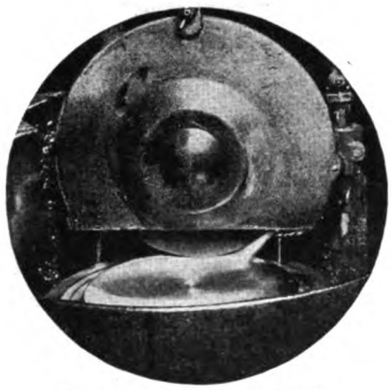

Fig. 5. Rotary Surface-Grinder

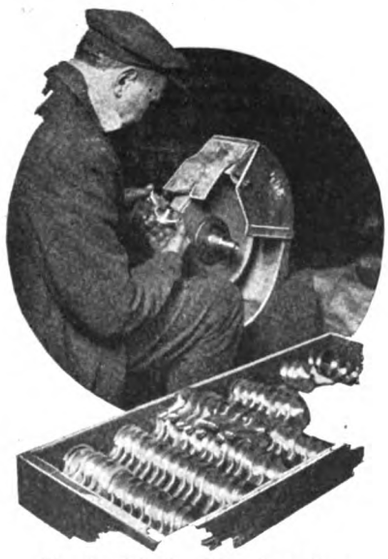

Fig. 6. Polishing Reproducer-Cups

feeds are employed for this work. The depth of cut is 0.0005 in. per traverse of the wheel. The work-speed is 560 r.p.m., corresponding to a surface-speed of 46 ft. per minute, and the production for each man, per machine, is 75 every hour. Between truing of the wheels 70 spindles are ground.

There are three consecutive grinding operations on the governor disc, the material of which is carburized and hardened steel. The first grinding operation to be performed on this piece is rough-finishing the outside diameter. For this operation an alundum 60-K wheel, 12 in. diam. and 1-in. face is used (Fig. 4).

These discs in process of manufacture undergo a heat treatment and are naturally somewhat distorted. A second grinding operation corrects this irregularity, removing from 0.012 in. to 0.040 in. In this operation an alundum wheel, grain 100, grade O, 12 in. diam., 1-in. face, is used. The work-speed is 550 r.p.m., the part being fed by hand against the wheel. A live-spindle attachment is employed and the production is at the rate of 45 per hour for each man and machine. During this operation the wheel is trued every 50 minutes.

The third and final grinding operation of the governor disc is the grinding of the face. The same method is employed as in the previous operation and the production is 40 per hour for each man and machine. The wheel is trued every 45 minutes.

The surface of the governor-disc plate must be absolutely flat. After the third grinding operation, the disc is sent to the lathe department where the face is lapped with No. 65-F alundum grain and olive oil.

Fig. 5 shows a rotary surface-grinding operation on a circular surface-plate of forged carbon-steel. This plate is 10 in. diam. and accurate work is required, the flatness tolerance being 0.001 in. The wheel used on this operation is an alundum, grain 60, grade K, 12 in. diam., and 1-in. face, which is revolved at a surface-speed of 6300 ft. per minute. These plates come from the lathe faced and the vertical speed is controlled by hand, about 0.0005 in. every second or third stroke. Both sides of the plate are finish-ground with about 0.003 in. removed from each surface. The work-speed is 154 r.p.m. In this work extreme care is taken not to spoil the edge of the plate. The production averages two per hour, the wheel being trued once during that period. Fig. 6 illustrates another polishing operation, the polishing of reproducer-cups with No. 90 alundum grain.

The point of greatest importance in the Edison phonograph is the complete suppression of foreign sound. Silence in the mechanism depends upon accuracy, and this accuracy is attained through the most modern methods of precision-grinding.

METHODS OF LUBRICATION*

The various systems by which oil is applied to bearings may be divided as follows:

For Individual Bearings

Hand-oiling
Drop-feed oiling.
Ring or chain oiling.

For Group Bearings

Splash system.
Circulation system.

Special Methods of Lubrication

Oil-bath.
Mechanical force-feed lubricator.

Hand-Oiling

This is the oldest method employed for lubricating bearings. It is the least efficient and the most wasteful. Hand-oiling is employed for the lubrication of low-speed shafting and low-speed bearings in a variety of machines. It is largely used for oiling small parts of valve-motions, and valve-spindles of steam engines, internal-combustion engines, and other power producers. Hand-oiling is also employed on various types of machines exposed to heavy vibration or rough usage where a lubricating device would be shaken off or broken.

*From 'Bearings and Their Lubrication', issued by the Vacuum Oil Company.

Generated on 2024-09-30 02:08 GMT / https://hdl.handle.net/2027/uiug.30112007837690
Public Domain, Google-digitized / http://www.hathitrust.org/access_use#pd-google
Digitized by Google
Original from UNIVERSITY OF ILLINOIS AT URBANA-CHAMPAIGN

After each oiling, the oil film in the bearing gradually becomes thinner and finally the bearing runs practically without lubrication until such time as it is oiled afresh. The lubrication is thus gradually reduced to a state of inefficiency, dependent upon the body of the oil in use, the length of the time between oilings, and the operating conditions.

Drop-Feed

By the drop-feed oiling system, we refer to any automatic appliance that feeds a moderate and fairly regular supply of oil to the bearing. One oiler is fitted to the centre of small bearings and two or more, suitably spaced, for larger bearings, providing at least one oil delivery into the bearing for every eight inches of bearing length. There are three types of lubricating devices operating on the drop-feed system, as follows:

Siphon-oiler.
Bottle-oiler.
Sight-feed drop-oiler.

Siphon or Wick-Feed Oiler (Fig. 1)

When, in the early days of engineering, hand-oiling proved inadequate for lubricating heavy-duty bearings, the wick-feed oiler was the first improvement introduced. Wick-feed oilers are employed for the lubrication of main bearings of marine steam-engines and other prime movers, as well as for the lubrication of medium-sized bearings of shafting and a variety of machines of all kinds.

The wick-feed oiler (Fig. 1) consists of a container, A, in which oil is filled to a certain level; the siphon oil-tube, B, which projects above the oil-level; and the wick, C, is introduced into the oil-tube, this end being at a lower level than the end immersed in the oil in the container. The wick, C, consists usually of one or several strands of woolen yarn, preferably of loose texture, which feeds more than yarn of tight twist and close texture.

The higher the oil-level in the container, the thinner the

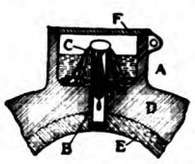

Fig. 1. Siphon-Oiler

oil, the deeper the wick is introduced into the oil-tube, or the greater the number of strands, the greater will be the oil-feed. When so many strands are used that they choke the oil-tube, a point is reached where the addition of more strands will reduce the oil-feed because of the greater resistance in passing through the tight wicking. If the oil-level is filled above the top of the oil-tube, the surplus oil runs to waste.

The oil tube, B, should project below the dividing line between the housing, D, and the bearing-brass, E, as otherwise the oil coming down the oil-tube might find its way between the parts and thus run to waste. The container should always be fitted with a lid or cover, F, so as to prevent the entrance of dust, dirt, and water into the oil.

Siphon-wicks in time get choked with impurities and become inoperative; therefore they should be renewed at suitable intervals. Where machines or engines are running intermittently, the wicks should be lifted from the oil-tube and left in the oil-containers every time the machinery stops; otherwise they will continue feeding and waste the oil. Oil should be added to the container at frequent intervals so as to keep the oil-level as constant as possible.

The Bottle-Oiler (Fig. 2)

This device has been especially developed for the lubrication of light and medium-size shaft-bearings operating at low to moderately high speed and under conditions that make a small constant feed desirable. Its use is spreading gradually for the lubrication of plain bearings of machines. The glass bottle, A, has a brass holder, D, fitted with a brass tube, C. A steel spindle, B, fits loosely inside the brass tube, C, its lower end resting on the shaft in the bearing.

The shaft, when revolving, gives the spindle a slight up-and-down motion, which has the effect of drawing a small supply of oil from the glass bottle. The oil flows down the

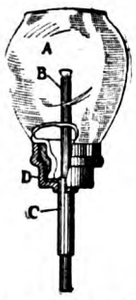

Fig. 2. Bottle-Oiler

spindle and finally reaches the bearing-surface. The bottle-oiler is automatic in action, starting and stopping with the motion of the shaft. If the bearing gets warm, the spindle will heat; the oil surrounding the spindle will become thinner and more oil will be fed. If it is found that the amount of oil supplied through the bottle-oiler is insufficient, the feed can be increased by using a thinner spindle. Bottle-oilers should not be used on machinery exposed to rough usage, as they are easily broken.

The Sight-Feed Drop-Oiler (Fig. 3)

This is extensively used on modern engines and machines of all kinds. The sight-feed oiler can easily be adjusted to feed one drop or more of oil per minute. The sight-feed oiler has a glass container, A, so that the level of the oil can be observed. Oil is poured through the filling-hole, B. The end of the adjusting needle or valve-spindle, E, is guided into a conical hole in the bottom of the central sleeve, F. By turning the milled collar, C, the needle can be raised or lowered so as to give a greater or smaller feed. If the top, D, of the adjusting needle, E, is turned to its horizontal

Fig. 3. Drop-Feed Oiler

position as shown, the needle, E, drops by spring-tension and shuts off the oil supply; when it is again raised, the feed will be the same as previously adjusted. The oil drops passing to the bearings may be observed through the sight-hole, G.

Some advantages of the sight-feed drop-oiler are: the feed can be quickly adjusted; quickly started and stopped; and the oil-level, as well as the oil-feed, is clearly visible. Sight-feed drop-oilers have the same disadvantages as the siphon-oiler as regards variation of the oil-feed, namely, the feed will vary with the oil level in the container and also with the temperature of the oil. In addition, when sight-feed drop-oilers are adjusted to feed a small quantity of oil, grit and dirt are likely to choke the oil-outlet from the container and stop the feed altogether.

Sight-feed drop-oilers may be arranged with multiple feeds

Generated on 2024-09-30 02:09 GMT / https://hdl.handle.net/2027/uiug.30112007837690
Public Domain, Google-digitized / http://www.hathitrust.org/access_use#pd-google
Digitized by Google
Original from UNIVERSITY OF ILLINOIS AT URBANA-CHAMPAIGN

as illustrated by Fig. 4. In this oiler there are six oil-feeds controlled by six different needle-valves, the oil dropping through the six sight-feeds, A, into oil-tubes, B, which guide the oil to the different bearings. Multiple-feed oilers, like the one illustrated, may be arranged to use siphons for the

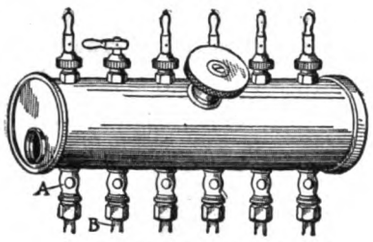

Fig. 4. Multiple-Feed Drop-Oiler

different oil-tubes, the combination being a wick oiler with sight-feeds.

When feeding oil to the crank-pins of horizontal steam-engines and other prime movers, the so-called crank-pin oiler (Fig. 5) is often employed. The crank, A, is attached to the end of the main shaft, H, which is supported by the main bearing. To the crank-pin, B, is fitted the right-angled oil-

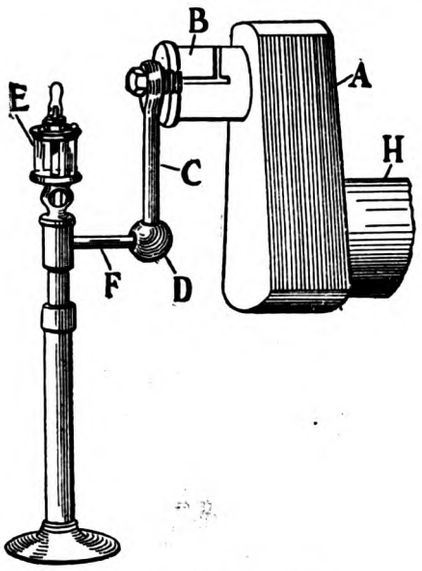

Fig. 5. Crank-Pin Oiler

tube, C, having a hollow enlargement, D, at its end, which is placed central, that is, in line with the axis of the main shaft, H. Oil flows through the sight-feed drop-oiler, E, usually fixed to the railing or on a standard tube, F, and drops into the enlargement, D, of the tube, C. By centrifugal force, the oil is thrown through the tube, C, and enters the crank-pin, B, through a drilled hole, finally reaching the crank-pin bearing-surface through a radial hole.

Ring or Chain Oiling

This type of oiling system is largely employed on high-speed shaft-bearings and on practically all electric motors, electric generators, and small steam-turbines. Ring-oiled main bearings are often used on gas-engines and oil-engines, as well as many stationary steam-engines. Ring oiling is used for medium as well as large-size bearings, but not for small high-speed bearings, as the oil-rings would fail to revolve on the shaft because of its small size and high speed.

The bearing-housing, A, (Fig. 6 and 7) forms on oil-reservoir in which the oil is maintained at a certain level, preferably indicated by an oil-gauge.

The rings will not touch the oil if the level be allowed to fall too low and the bearings will receive no lubrication.

On the shaft, C, are usually suspended one or two rings or chains, B, which dip into the oil. When the rings revolve with the motion of the shaft, C, they carry oil to the top of the shaft, from which point it runs into the oil-distributing channel and bearings.

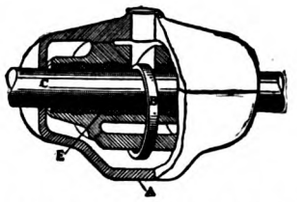

Fig. 6. Section of Ring-Oiled Bearing

Sometimes instead of revolving rings or chains, there is a collar, B (Fig. 8), fixed to the shaft, C. This collar, B, dips the bearing, between the top and bottom parts. This can be into the oil and carries it above the shaft, whence the oil is guided into the oil-channel, D, which distributes it to the bearing. The oil leaves the ends, E, of the bearing and

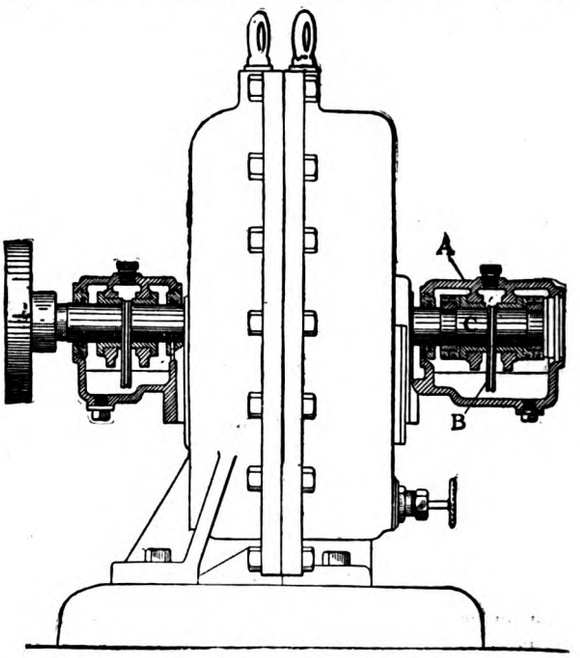

Fig. 7. Small Turbine With Ring-Oiled Main Bearings

drops back into the oil-reservoir. It is thus kept in constant circulation.

There will be little oil waste in a well-designed ring-oiled bearing. Leakage sometimes will occur through the side of overcome by inserting a thin lead wire, F (Fig. 8), which, when the bearing is put together, will be pressed flat and will seal the bearing.

The oil-reservoir should be deep and should contain a

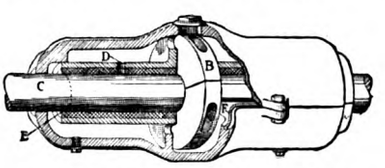

Fig. 8. Section of Collar-Oiled Bearing

large quantity of oil, so that impurities that may enter the bearing will separate and fall to the bottom and not be kept in circulation. In large bearings, cooling of the oil by the introduction of a cold-water coil in the reservoir may be found desirable or even necessary under severe conditions.

Generated on 2024-09-30 02:08 GMT / https://hdl.handle.net/2027/uiug.30112007837690
Public Domain, Google-digitized / http://www.hathitrust.org/access_use#pd-google
Digitized by Google
Original from UNIVERSITY OF ILLINOIS AT URBANA-CHAMPAIGN

Oiling Systems for Group Bearings

Splash-Oiling (Fig. 9)

This system is employed for lubricating a number of bearings in an enclosed casing and is frequently found in small enclosed vertical or horizonal steam-engines, air-compressors, gas-engines, oil-engines, and automobiles and motorcycle engines. The enclosed crank-chamber, M, is filled with oil to a certain level. Means should be provided to maintain this level as constant as possible by providing an automatic overflow, L.

In some small steam-engines, motorcycle engines, and certain types of automobile engines, the crank-disc, B, or the fly-wheel revolving inside the crank-chamber, M, is arranged so that it dips into the oil. The oil is picked up by the revolving rim and thrown off by centrifugal force. Oil-wells or pockets, N, cast on the inside of the casing collect the oil

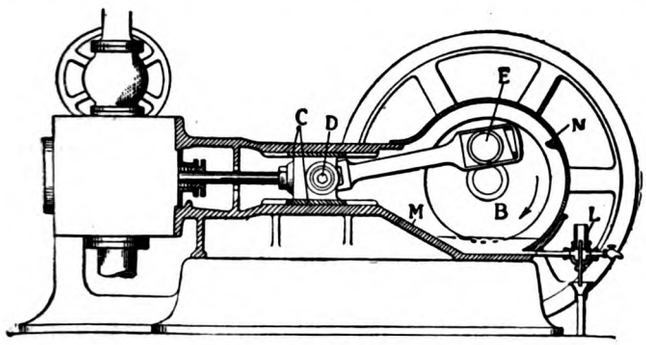

Fig. 9. Splash-Oiling System

and lead it through various channels, tubes, or troughs, to parts to be lubricated. When engines are not equipped with a crank-disc, B, dippers are fixed to the crank-pin bearings, E. These dippers dip into the oil when the engine is in operation and produce inside the crank-chamber a spray or mist of thousands of tiny drops of oil, which are constantly reaching the moving parts. The main bearings and eccentrics, crank pin, E, cross-head pin, D, and cross-head guides, C, are lubricated direct by means of the oil spray, or indirectly by oil-troughs, N, which catch the oil and guide it by means of pipes into the bearing.

Circulation System

There are two main systems embodying the oil-circulation principle, namely:

Non-pressure oil-circulation system.

Pressure oil-circulation system.

Non-Pressure Oil-Circulation System

This system does not deliver oil to bearings under direct pressure.

A non-pressure oil-circulation system is employed for automatically lubricating main bearings, crank-pins, cross-heads, cross-head guides, etc., comprising most of the external moving parts in medium or large steam-engines, gas-engines, and Diesel engines; also for some steam-turbines, and groups of large shaft-bearings. In the lubrication of the steam-engine shown (Fig. 10) oil flows by gravity from the supply-tank, A, through the distributing pipes, B.

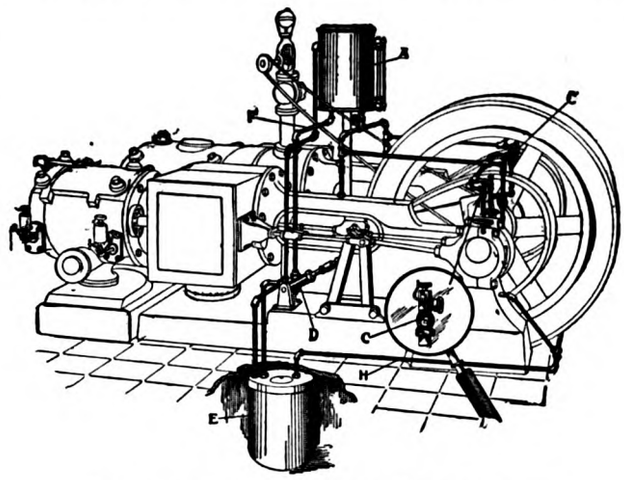

Fig. 10. Non-Pressure or Gravity Circulating System

Sight-feed glasses, C, are placed in each pipe-line, through which the oil is fed by regulated adjustment to the bearings. Having done its work, the oil drains back from the various parts through the return-oil pipe, H, to the sump-tank, E. The oil-pump, D, driven by the engine draws the oil from the sump-tank, E, and delivers it, either through an oil-cooler or directly through the pipe, F, into the gravity supply-tank, A. If more oil is delivered to the top tank, A, than is required for the bearings, the surplus oil returns through an overflow-pipe into the sump-tank, E.

Pressure Oil-Circulation System (Fig 11)

Oil is delivered under pressure as directly as possible to the various bearing-surfaces requiring lubrication. This system is largely employed for lubricating steam-turbines, the enclosed type of steam-engines, Diesel engines, oil-engines, and automobile engines. Fig. 11 illustrates the prin-

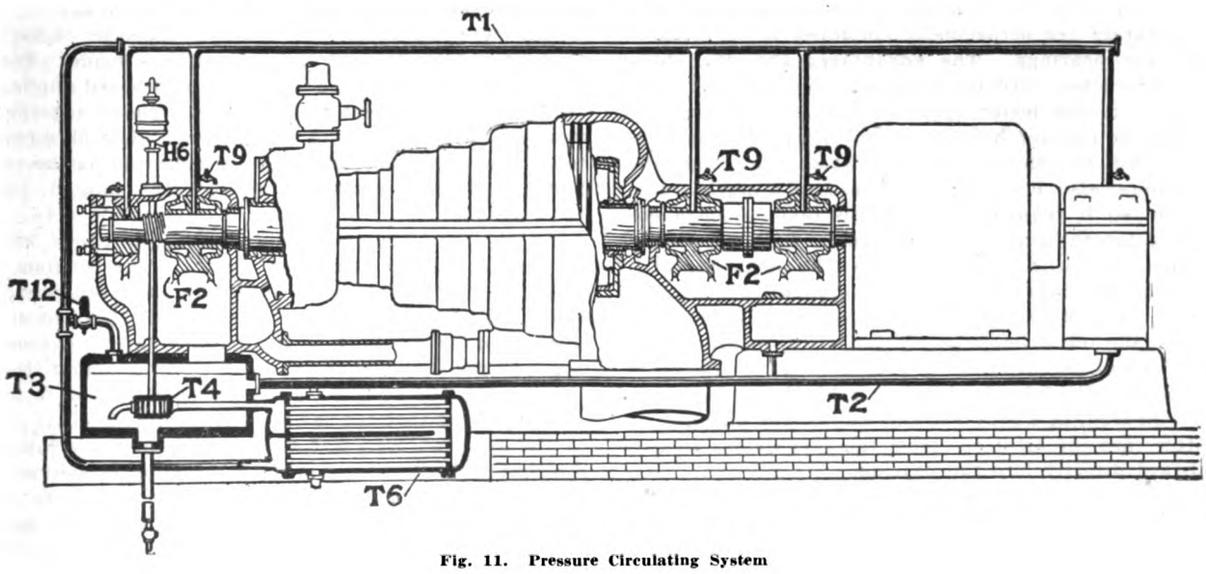

Fig. 11. Pressure Circulating System

Generated on 2024-09-30 02:07 GMT / https://hdl.handle.net/2027/uiug.30112007837690
Public Domain, Google-digitized / http://www.hathitrust.org/access_use#pd-google
Digitized by Google
Original from UNIVERSITY OF ILLINOIS AT URBANA-CHAMPAIGN

ciple of the pressure oil-circulation system as usually employed on a steam-turbine. From the lower portion of the governor spindle, H6, is driven the oil-pump, T4, which takes oil from the oil-tank, T3, and delivers it at from 3 to 20 lb. per square inch, through the oil-cooler, T6, directly to the bearings, F2, through the oil-supply pipe, T1. A relief-valve, T12, in a by-pass controls the oil-pressure in the line. It is a good practice to have inserted in the return-oil pipe, T2, sight-feeds in which the actual flow of oil from each bearing is shown. Frequently, test cocks, T9, are fitted in the bearing-top, which, when open, will show whether the bearing is being adequately supplied with oil.

Special Methods of Lubrication

Oil-Bath

This system is employed only for vertical bearings, such as the light-weight, high-speed spindles employed in textile mills, or the foot-steps of heavy vertical shafts of gyratory crushers and hydro-electric units. Fig. 12 illustrates the oil-bath system, as employed on ring-spindles. The bolster-case, A, holds in position the bolster, D, and acts as an oil-

Fig. 12. Section of Ring-Spindle

reservoir. The spindle, C, is free to revolve in the bolster. The spindles are hand-oiled through the oil-way, B, in the bolster-case. By the centrifugal force of the revolving spindle, oil is drawn into the bolster through the drilled holes, E, and is constantly lifted to the top of the bearing, whence it overflows and drains back into the lower part of the bolster. Thus a constant circulation of oil is produced and the spindle-bearing is kept flooded with oil. Some oil is wasted in leakage and must be replaced at suitable intervals.

Mechanical Force-Feed Lubricator

Either single-feed or multiple-feed mechanically operated lubricators are occasionally employed for feeding oil to important bearings. The advantages are, that being operated by a lever, actuated from some moving part of the engine, the mechanically operated lubricator starts and stops with the engine; it feeds the oil more uniformly and regularly and, therefore, with less waste than sight-feed or wick-oilers; also, because of the pressure, a much heavier oil can be fed if required. The oil is taken from a container by a mechanically operated pump. It is fed through a feed-pipe fitted with a check-valve at the pump and at its extreme end in order that the pipe shall always be filled with oil. As soon as the engine starts, the lubricator operates and the oil is immediately delivered under pressure from the end of the oil-pipe. A bullseye sight-feed arrangement is either fitted in the lubricator itself, one sight-feed for each oil-feed, or at the extreme end of the oil-pipe. In this latter case the oil drops from the check-valve through a sight-feed directly into the bearing.

Whatever the oiling system employed it is important that a regular routine be instituted for maintaining it at its highest efficiency. Bearings that are hand-oiled should be oiled at frequent intervals to ensure the presence of an oil film at all times. The oil-containers in wick-feed oilers, bottle-oilers, sight-feed oilers, and mechanically operated lubricators should be filled at regular intervals. A system should be inaugurated for starting and stopping the oilers as required. Lubricators should never be allowed to run empty or to get choked with dirt.

WATCHING THE WHEELS GO 'ROUND

Every youngster, from eight to eighty, loves to know 'How the wheels go 'round', especially when the wheels in question are those of an automobile. But this has its drawbacks. Once let their curiosity be sated, and the members of the Ancient Order of Investigators strike their big snag, they don't know what to do with the parts that are left over. Many a man, who has thought himself an expert mechanic, has found himself at the end of a long session with enough excess parts from the original car to make a new one, and neither of them in good working order.

Now, however, the problem has been solved. It is possible to see exactly 'how the wheels go 'round', what makes the car go, and, what is more important, what keeps it from going, and just how it is put together.

The Cole Motor Car Co., of Indianapolis, decided to portray its model on the motion-picture screen, and portray not only the model, but every detail about its machinism. The Harry Levey Service Corporation, of New York, was selected to make the picture.

It was impossible to place the camera inside the automomobile mechanism, to secure 'close-ups' of each bit of mechanism in operation, so, from a combination of mechanical skill, inventive genius, a talent for making paper dolls, or at least fibre-board 'cut-outs', and the motion picture, was developed the 'Mechanigraph'.

First the actual machinery of the motor was studied from every angle—taken apart, put together again (this time by a man whose mechanical skill precluded the possibility of any pieces being left over), watched carefully while it was dormant, and while in action. Then, from specially prepared mechanical contrivances, cut to proper proportions, greatly reduced, moving just as the original machinery moves, doing all the things the machinery does when it is in operation, and possessing the added advantage of being moved and operated at the will of the maker, so that the most intricate working can be clearly shown.

The illustrations present a view of the 'Mechanigraph' that was made to represent the vacuum gasoline-feed system of this car. First, an exterior view was made, with all details complete, front, back, joints, just as though the actual model was being fashioned. Then, another set of parts, this time of the interior of the system, was made. For each part of the original there was a tiny cardboard duplicate cut to the proper proportions. These are pieced together with working-joints made with brass rivets. The fibre-board interior was placed within the pieces representing the exterior, which were in turn hinged, riveted, and jointed, just like the original.

Artists that are specialists in making paper look like metal, colored the completed replica. The problem of the fashioner of the fibre-board duplicate was even harder than that of the builder of the original model. He had only two dimensions in which to work, his medium for expression is flat, and yet, when shown in working-order under the eye of the camera, the results he obtains must appear to have all the properties that are part of the machine itself.

The greatest care was necessary in the making of this 'Mechanigraph'. The duplicate, when it is shown on the screen, is greatly magnified. A tank that is made to measure ten inches high in fibre-board, appears ten feet high when thrown upon the screen; and an error in its making that

Generated on 2024-09-30 02:09 GMT / https://hdl.handle.net/2027/uiug.30112007837690
Public Domain, Google-digitized / http://www.hathitrust.org/access_use#pd-google
Digitized by Google
Original from UNIVERSITY OF ILLINOIS AT URBANA-CHAMPAIGN

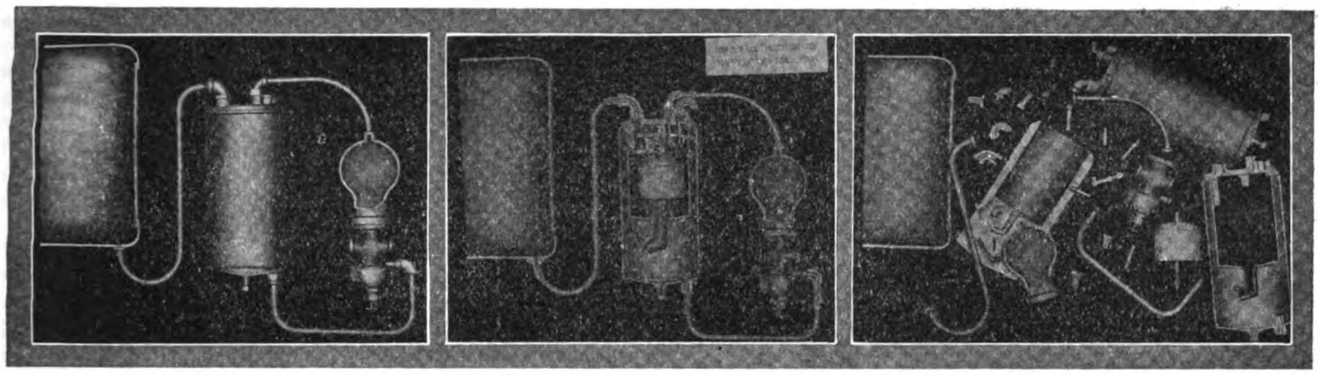

Reading from Left to Right: Exterior of the Vacuum Gasoline-Feed System of the Cole Automobile, as Shown by the Mechanigraph; Sectional View of the Same; and Some of the More than One Hundred Pieces Required

would be practically invisible to the naked eye, appears on the screen as a glaring inaccuracy.

More than a hundred pieces were required for the making of the 'Mechanigraph' of this single part of the automobile, and the most difficult work began when the actual making was finished. The animation of the 'Mechanigraph' must show in detail exactly how the mechanism works. Each movement of the system required a separate exposure of the motion-picture camera to tell the story. The parts of the fibre-board replica were moved by hand into the consecutive positions that are part of the movement of the original model, and for each movement a picture was made. If one part was moved a fraction of an inch, and this movement had a corresponding effect upon the other parts, these two were moved to the exact position they would occupy if the actual machine were in operation—and each time a picture was made. All this had to be perfectly timed, so that the final action, as it appears on the screen, is smooth and convincing, without any appearance of jerkiness.

'Mechanigraphs' of other parts of the Cole automobile have been made, and what appears on the screen to be the inner mechanism of the Cole motor-car is nothing more nor less than a 'doll's house' motor-car interior, functioning and working just like the original. It is made of fibre-board, and it is operated by being pushed into position, yet it permits the least expert mechanic to see 'how the wheels go round'. Paper 'cut-outs' have found a practical application to the automobile industry.

NEW ELECTRIC ANNEALING FURNACE FOR FOUNDRIES

Although a great deal of progress has been made in the electric-heat treatment of guns and tool-steels, and in japanning-ovens, electric heating has not been widely adopted as yet by the foundryman. Possibly this is due to the fact that most of the electric-heating equipment at present on the market, although giving accurate scientific results, is too cumbersome and complicated for general foundry practice. Another reason is the high initial cost of such equipment compared with gas or oil-fired furnaces. To avoid these disadvantages, the Electric Furnace Construction Co., Philadelphia, has designed and is putting on the market a simple electric-heating unit placed in a pit, the top of which is level with the foundry-floor. The outfit consists of an electric-heating furnace and two or more soaking-pits, with cast-iron containers and sleeve-covers. The soaking-pits have no electric-heating unit. On stripping the hot castings from the molds, they would be divided between two or three of these cast-iron containers. One of these would be placed in the centre electric-annealing pit, and the others in the plain soaking-pits. The heating of the electric pit is recorded and automatically controlled at any desired temperature. The pyrometer control is set to proper temperature and the castings held for a sufficient length of time to ensure that the structure throughout had gone through the necessary allotropic change. This depends upon the mass of the largest casting and the degree of annealing necessary. For small castings, 15 minutes at 1500°F. has been found sufficient. The furnace-cover is then removed and the cast-iron sleeve is lowered over the iron cage or container. The bottom of this cover or sleeve sinks into a small circular sand seal, thereby excluding the atmosphere from the container and castings.

The containers and castings during heating in the electric pit, and while in the soaking-pits, will not be subjected to the scaling of an ordinary fuel-fired furnace, as the atmosphere in all the pits can be kept neutral. The cover prevents scaling during transfer from one pit to the other. The annealed castings in their container and covering-sleeve are transferred to the soaking-pit to cool. This pit will already have absorbed a certain amount of heat from the previous charge. The second part of the heat is then transferred to the electrically heated pit for treatment. When this is complete, the remaining part of the charge is likewise transferred. The operation is a continuous one, and instead of all the castings coming from the annealing-ovens at one time, they will be divided. This should be particularly useful in small foundries. The arrangements for placing the covering-sleeve in position and for removing the containers from one pit to another are simple, and cannot possibly get out of order. The containers and sleeves are not subjected to scaling, and should last longer than an ordinary annealing-box. If necessary, they could be made of non-corroding metal. The different parts are simple castings, can be made in any foundry, and they are free from all machine work.

In the usual annealing process, it is necessary to heat the castings gradually and cool to say 700°F., in the same furnace in which the annealing is done. This is by far the longest part of the annealing, and means loss of time and, therefore, production. A furnace capable of taking the whole of the charge is necessary. By the process described, the heating furnace is only one-half the size that would otherwise be required, but it is kept fully employed as nearly as possible, and there is little loss of expensive heat during heating and cooling of the casting.

The actual heating unit is of ni-chrome, designed for either alternating or direct current, preferably 110 or 220 volts. The resistor units are suspended on special refractory blocks and are free to expand. The life of such units for temperatures of 1700°F. and under is practically indefinite. They are protected from mechanical injury by buffer-blocks over and under the elements. The heat is automatically regulated and recorded by special pyrometer control. The soaking-pits are of simple type, with a bed of coke dust in the bottom to maintain a neutral atmosphere. The covers of all three units are level with the foundry-

Generated on 2024-09-30 02:16 GMT / https://hdl.handle.net/2027/uiug.30112007837690
Public Domain, Google-digitized / http://www.hathitrust.org/access_use#pd-google
Digitized by Google
Original from UNIVERSITY OF ILLINOIS AT URBANA-CHAMPAIGN

floor. The containers are sectional, and require no machining. They can be made of cast-iron or special non-corroding castings. The inner flanges act as stiffeners to the container, and the sides are fluted with a sand seal at the bottom. The sleeve-covers are designed to cover and pass over the containers above described. The sand-seal excludes the atmosphere and prevents scaling when the castings are being taken from furnace or electric pit to soaking-pit. The sleeve itself is in contact with the heated charge for so short a time that a scaling temperature will not be reached. An ordinary crane-hook will handle the sleeve-cover without difficulty. The first cost of this installation is low. The part that represents the largest part of this cost, the electric-heating unit, can be in continuous operation, giving an excellent load-factor. All of the advantages of electric annealing are ensured, including uniform results and the elimination of the personal element by the automatic control, and the neutral atmosphere, which prevents any scaling of castings. Patents are pending covering the process and equipment.

THE MERCO NORDSTROM PLUG VALVE

The taper plug-valve, when properly constructed, is undoubtedly the most efficient form of valve for universal use when it works. When, on the other hand, it sticks and binds in its seat, it becomes one of the most 'onery' pieces of mechanism that it is possible to imagine, and has probably spoiled the tempers of more good mechanics than any other one cause.

S. J. Nordstrom, a mechanical engineer engaged at Mexico City in the design, construction, and operation of cyanide

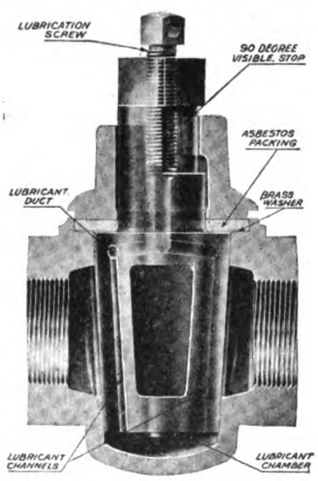

Phantom View of the Merco Nordstrom Valve

plants, was impressed with the obvious defects and shortcomings of valves in handling cyanide solutions and slime in the concentrating plants and mills of Mexican mining centres. Mr. Nordstrom saw that the difficulty with all forms of patent lubricated plug-valves was that, given a perfect fit between the valve and its seat, there was no possibility of forcing grease into a space which did not exist, namely, that there was no clearance between the valve and its seat. He saw then that it was necessary to design a valve in such a way that the lubricant itself could be used to lift the valve from its seat so as to allow clearance and a consequent spreading of the film of lubricant over the surface of the valve-seat. Having arrived at this conclusion, the present design of this valve soon worked itself out as a closed plug-cock with chamber at the bottom of the valve-seat, a receptacle for grease in the shank of the plug connected by drilled ducts with channels in the taper sides of the plug, which channels continued to the bottom of plug, thereby connecting with the chamber when the plug was seated in the valve.

References to the illustration will show clearly the working principles of this valve. The phantom-view showing the plug exposed indicates the action of the grease. Considering that the grease-chamber at the bottom, the grease-channels, the grease-duct, and the cylindrical space underneath the end of the lubrication-screw are entirely filled with lubricant, and considering also a perfect fit between the plug and its seat, it is evident that a slight turn of the lubrication-screw will exert a tremendous hydraulic pressure upward on the bottom of the valve-plug. It will be noted that the cap which is held down by bolts at either side (not shown in the illustration) forms a tight joint through an elastic packing washer. The valve-plug is so machined that when seated in the valve its faced shoulder is slightly lower than the facing on the edge of the valve-cage. When, therefore, the cap is clamped down tightly, it makes first a tight joint on the edge of the valve cage and the elastic packing is lightly pressed against the anti-friction washer on top of the plug facing, leaving sufficient elasticity in the packing so that the hydraulic pressure mentioned above raises the plug by an infinitesimal (but sufficient) amount to allow clearance for a film of grease between the plug and the seat. It is in this hydraulic lifting action that this valve is differentiated from all other lubricating plug-valves, and it is right here that its success lies.

Iron valves of this type have been tried out in a sal-ammoniac solution, closed for two months so that they were practically rusted solid, and one turn of the lubrication screw was sufficient to allow very easy turning of the plug. A ninety degree stop is arranged between the shank of the plug and the valve cap, and this stop has an extension above the valve cap so that the operator can see at a glance just how the valve should be turned and when it is open and shut. This stop is so positioned that the grease channels on the sides of the plug can never be open to the action of the liquid which is being handled. The Merrill Co., which is distributing this device, expects that it will be found especially useful in handling cyanide-solutions and in marine work.

MINERS' SAFETY HAT

The miners' 'Hard Boiled' cap, which is being featured as a safety device by E. D. Bullard, of 268 Market street, San Francisco, has attracted the attention of the California Industrial Accident Commission and is made the subject of an article by H. M. Wolfiin in a recent issue of the 'California Safety News', a paper published by the Commission.

Wolfiin calls attention to the number of head injuries incurred by miners, steel erectors, shipbuilders, and workers in similar lines, and says that heretofore the only available protective caps were too expensive, too heavy, and too uncomfortable to be generally adopted. In the case of the 'Hard Boiled' cap, however, he points out that it weighs only nine ounces, that it is comfortable and inexpensive, and that it is a real safety device.

He cites a number of actual instances to prove that the cap is a real protection to workers. One case was where a twelve-pound joining-iron fell six feet, striking the head of a shipyard worker who was wearing one of the caps. The man was knocked to his hands and knees, but was not injured, and the cap was not damaged. Another case was at the Moore shipyards, where a four-pound piece of angle-iron fell twelve feet, striking a workman squarely on top of the cap. In this case, also, the man was knocked to his knees, but not injured.

Julius Janes, formerly president of the Standard Steel Castings, of Cleveland, has arranged to represent the Farrell-Cheek Steel Foundry Co., of Sandusky, in the Cleveland territory.

Generated on 2024-09-30 02:12 GMT / https://hdl.handle.net/2027/uiug.30112007837690
Public Domain, Google-digitized / http://www.hathitrust.org/access_use#pd-google
Digitized by Google
Original from UNIVERSITY OF ILLINOIS AT URBANA-CHAMPAIGN

A NOVEL EXPERIMENT

By Clyde H. Albrecht

It's an old saying that you can't tell what you can do till you try. Who would have thought it would be safe to use dynamite in the cupola of a foundry to loosen slag from the grates?

In Deere & Co.'s foundry recently a fan broke down while the workmen had a partly melted kettle of slag and they dumped it on the grates. They tried to cut it away with cold chisels and an acetylene torch but neither would touch it. I was asked to blast it off with dynamite.

I could not drill holes in it so had it raised together with the grates with jack-screws about eight inches.

I then laid ½ lb. of 40% dynamite on top of the slag, covered it with about a bushel of moist clay well tamped. This shot made a hole about two inches deep. I cleaned the broken material out well; then put ¾ lb. of dynamite in the hole covered with clay as before. Three other similar charges were fired. These gave quite a cavity. In this I loaded 2 lb. of dynamite. I then had a pocket eight inches deep, into which I loaded 2 lb. more covered with a wheelbarrow-load of clay. This finished the job. The cupola had a 12-in. firebrick wall with a ½-in. band of sheet steel riveted over the brick. The work was done at night when nobody was working in the foundry.

Book Reviews

Structural Steelwork. By E. G. Beck. Pp. 459, ill., index. Longmans, Green & Co., London and New York. For sale by 'Mining and Scientific Press'. Price, $7.50.

This is a good book on structural-steel design and construction from a British standpoint, and an excellent one for a British engineer to buy. On the other hand, while the points of difference between American and British practice are relatively unimportant, nevertheless, they do exist. Consequently we do not believe, unless he wishes to inform himself of differences between practice in the two countries, that the American engineer will have much use for the book, well written as it is.

The Business Man and His Bank. By William H. Kniffin. Pp. 273, ill., index. McGraw-Hill Book Co., Inc., New York. For sale by 'Mining and Scientific Press'. Price, $3.

Most books on banking are written for the banker or the bank employee. This one is written for the depositor and the borrower. Besides the ordinary commercial banks and savings banks, other organizations performing some or all of the functions of banking are discussed, although most of the space is naturally devoted to the ordinary commercial bank, or bank of discount. The important features of the various kinds of business that may be done between a bank and its depositors or borrowers are discussed in turn. The book will be of interest to anyone having dealings with a bank, and, particularly, to the man in business for himself.

Ten-Minute Talks With Workers. Pp. 208. Doubleday, Page & Co., New York. For sale by 'Mining and Scientific Press'. Price, $1.

This is a series of 40 short articles from various issues of the Trade Supplement of the London 'Times', the wording being changed occasionally to suit American readers. Each article is a brief discussion of some subject connected with political economy, expressed in language suited to the man in the street and in the shop, but without any atmosphere of 'talking down' to the audience. In fact, the book might be called an anti-Bolshevik tract, and, as far as the reading matter is concerned, it is a good one. However, binding, printing, and other mechanical features are of such quality that the price is necessarily too high for a tract. The man that really needs to read the book will not pay the dollar for it, and employers and others can hardly afford to arrange for free distribution.

Hydraulic Tables. By Gardner S. Williams and Allen Hazen. Third edition. Pp. 115, ill., index. John Wiley & Sons, Inc., New York. For sale by 'Mining and Scientific Press'. Price, $2.

The principal change as compared with the second edition of this book is the inclusion of the chapter on 'Additional Data', in which are discussed the results of the principal experiments on the flow of water that have been made in the 12 years since the appearance of the second edition. Various tables and other data on the flow of water through pipes and other passages, based on the Hazen-Williams formula comprise most of the book. There is also a division devoted to the flow of water over weirs. The book will be useful to the hydraulic engineer.

Shop Mathematics. By Erik Oberg and Franklin D. Jones. Pp. 275, ill., index. The Industrial Press, New York. For sale by 'Mining and Scientific Press'. Price, $3.

This book is intended for machinists, tool-makers, and apprentices, primarily for those whose previous mathematical education has been incomplete. The book reviews arithmetic, and discusses such elementary algebra, geometry, and trigonometry as is especially applicable to shop calculations. Most of the book is devoted to the application of the mathematical theories already discussed to the solution of machine-shop problems, such as setting tapers, change-gears, indexing on the milling machine, and gear-cutting. The book would be improved by the addition of an appendix containing the mathematical tables most commonly used in machine-shop calculations, but, even as it is, it will be useful to shop-men.

Tin, Sheet-Iron and Copper-Plate Worker. By Leroy J. Blinn. Pp. 319, ill., index. Henry Carey Baird & Co., Inc., New York. For sale by 'Mining and Scientific Press'. Price, $3.

About half of this book is devoted to practical directions for cutting patterns for all kinds of sheet-metal work, and to a summary of the principal propositions of plane geometry of importance in such work. The rest of the book is a curious hodge-podge of mathematical tables, directions for tempering, receipts for varnishes, lacquers, cements, and solders, and considerable other miscellaneous information. There is a good index, however, which goes a long way toward making up for the lack of arrangement of the book itself. Furthermore, the material, although the arrangement is disorderly, is almost without exception of such a character as to be useful to the sheet-metal worker, who will find the book, in spite of its defects, well worth while.

Personnel Administration. By Ordway Tead and Henry C. Metcalf. Pp. 520, ill., index. McGraw-Hill Book Co., New York. For sale by 'Mining and Scientific Press'. Price, $5.

The systematic study of industrial relations and the development of the technique of personnel management are so new that the literature of the subject is scanty, and much information is only to be found scattered through periodicals and official reports. The present volume is a fairly successful attempt to collect the most important of these data under one cover. That it is, in many places, too much colored by the authors' personal preferences regarding matters in dispute was, perhaps, unavoidable. Nevertheless, the book will be of value to the employer, the personnel manager, and to others interested in the subjects of which it treats. The scope of the book is best indicated by the sec-

Generated on 2024-09-30 02:09 GMT / https://hdl.handle.net/2027/uiug.30112007837690
Public Domain, Google-digitized / http://www.hathitrust.org/access_use#pd-google
Digitized by Google
Original from UNIVERSITY OF ILLINOIS AT URBANA-CHAMPAIGN

tion-headings, which are The Personnel Department; Employment Methods; Health and Safety; Education; Research; Rewards; Administrative Correlation; and Joint Relations (between employer and employee).

Design of Highway Bridges. By Milo S. Ketchum. Second edition. Pp. 538, ill., index. McGraw-Hill Book Co., Inc., New York. For sale by 'Mining and Scientific Press'. Price, $6.

Changes in highway-bridge practice during the 12 years since the first edition of this book was published, particularly the increase of live loads and the growing use of reinforced concrete, have made necessary its revision and the almost complete re-writing of some parts. The scope of the book has also been extended so as to cover both concrete and timber bridges as well as steel. Part I discusses the calculation of stresses in the various bridge members. Part II covers the design of steel and of timber highway bridges, while Part III covers reinforced concrete bridges and foundations. In Part IV, various details of bridge design, contracts, estimates and costs, and bridge erection are considered. There are three appendixes, the first covering specifications for steel bridges, the second, specifications for concrete bridges, and the third contains various structural tables. The book will be indispensable to anyone engaged in the design or the construction of highway bridges.

Trade Notes

A new machine-shop is to be constructed at the Mare Island Navy Yard.

The Curtiss Airplane Co. will establish a manufacturing and distributing plant at Sacramento.

The Stauffer Chemical Co. has commenced operation of its new $600,000 sulphuric-acid unit at Stege.

The Torrance Window Glass Co. will build a factory near Los Angeles. The estimated cost is $2,000,000.

The Southwestern Shipbuilding Co., Long Beach, Cal., has signed contracts for new ships costing $8,000,000.

The California Pottery Co., of Oakland, will establish a plant at Merced. About 100 men will be employed.

The Board of Supervisors of Sonoma county has decided to buy machinery and tools for a new county garage.

The Pats Manufacturing Co. of Lodi has established a factory there for the manufacture of an automobile signal.

The Los Angeles-Pacific Navigation Co. and the Los Angeles Steamship Co. have been combined under one management.

The National Association of Purchasing Agents will hold its annual convention at the Congress hotel, Chicago, October 11-13.

The Sanford Friction Thresher Co. has started the construction of the first unit of its thresher-factory at Centralia, Washington.

The Clark-Turner Piston Co., of Los Angeles, has completed an addition to its foundry, providing 5000 sq. ft. more of floor-space.

The keel of the battleship 'Montana', which was laid figuratively on July 4, was actually laid on September 1 at the Mare Island Navy Yard.

The Griffin Wheel Co. has practically completed the addition to its car-wheel plant at Tacoma, and the company is in the market for machine-tools.

The steel contract for the Class A motion picture theatre to be built in Richmond by Turner and Dahnken, has been awarded to the **Judson Iron Works.**

The Schaefer Copper Works, of Portland, has been incorporated with a capitaliaztion of $100,000 by August Schaefer, Julia Schaefer, and H. Boost.

The Chicago Section of the **American Welding Society** has issued a booklet, the title of which is 'Keep the Guesswork Out of Welding'. Copies may be obtained by addressing the American Welding Society, 608 South Dearborn street, Chicago.

To provide for future expansion of its plant, the **Otis Elevator Co.** has purchased the half-block adjoining its present site at Beach and Stockton streets.

W. L. Chandler, purchasing agent for the Dodge Sales & Engineering Co., is a candidate for the presidency of the National Association of Purchasing Agents.

The McKnight Fire Brick Co., of Porterville, has been reorganized and preparations have been made for the construction of a plant employing about 50 men.

The Fageol Motor Co. has established a factory at Cleveland, Ohio, for the manufacture of trucks and tractors. The Oakland plant of the company will be enlarged.

Carl C. Thomas has been appointed Western representative of **Dwight P. Robinson & Co.,** engineers and constructors, with offices at 1240 South Hope street, Los Angeles.

The Coast Tire & Rubber Co. will increase its capital to $5,000,000. One million dollars worth of common stock has been sold. The new Oakland factory is practically completed.

The Fitzpatrick Products Co. has leased the building at the north-west corner of 16th and Kansas streets for a period of 15 years and will use it as a factory for making its stump-puller.

The Sacovalley Meat Canning & Provision Co. is building a packing-plant just outside the city of Sacramento. The estimated cost is $200,000. The plant will be in operation early in January.

J. E. Hoblitt, for the past eight years treasurer of the Bean Spray Pump Co., has resigned to become manager of the oil, chemical, and mining interests of the E. G. Lewis Co., of Atascadero.

The Hutchinson Lumber Co., which is developing a large tract of timber land in southern Butte county, will build a sawmill and a furniture factory at Oroville. The total estimated cost is $600,000.

The American Rolling Mill Co. has issued an illustrated booklet entitled 'Why American Ingot Iron Costs More', and describing briefly the various processes required in the manufacture of this product.

Tate-Jones & Co., Inc., of Pittsburgh, has issued the first number of 'Metal Heating', a journal devoted to the interests of heat-treaters and forgers, and containing a number of useful and timely articles.

Main distributing agencies are being established in the larger Western cities by the **Frank M. Cobbledick Co.** About 50 engineering-specialty and automobile-accessory stores will be established in smaller towns.

The Pacific Tractor Works, Sansome and Green streets, is remodeling its building and installing $40,000 worth of equipment and machinery for the manufacture of tractors. From 35 to 40 men will be employed.

The Universal Sheet Metal Works, 2809 West Pico street, Los Angeles, has filed notice of organization to engage in the manufacture of metal products. V. H. Meadow, 4420 Lockwood street, Los Angeles, is president.

The Direct Steel Process Co. has been incorporated at San Jose with $1,000,000 capital. Construction of iron works, foundries, and rolling-mills together with working iron and other ores is the company's announced program.

The Washington Iron Works, of Los Angeles, is doubling the capacity of its foundry. The new equipment includes a 60-in. Whiting cupola and a 24-in. Connersville blower, both of which were furnished by **Ditty Bros., Inc.**

The Southern California Edison Co. has announced a construction program that provides for the expenditure of $200,000,000 during the next 15 years, including the construction of plants generating 750,000 horse-power.

The property of the **White Star Plaster Co.** at Arrowhead, near Las Vegas, Nevada, has been acquired by the Blue Dia-

Generated on 2024-09-30 02:10 GMT / https://hdl.handle.net/2027/uiug.30112007837690
Public Domain, Google-digitized / http://www.hathitrust.org/access_use#pd-google
Digitized by Google
Original from UNIVERSITY OF ILLINOIS AT URBANA-CHAMPAIGN

mond Plaster Co., of Los Angeles. In order to double the output, $30,000 worth of machinery has been ordered.

The Moore Shipbuilding Co. announces that its present facilities for drydocking comprise a floating drydock, with a capacity of 20,000 tons, and three marine railways, with capacities of 8000, 7500, and 5000 tons respectively.

The Electric Furnace Construction Co. announces the sale of a ¼-ton Greaves-Etchells furnace to the Brennen Steel Castings Co., of Cleveland, and a one-ton furnace to the Joliette Castings & Forgings, Ltd., of Joliette, Canada.

The Moore Shipbuilding Co. was the successful bidder for repairing the Dutch ship 'Arakan', which went on the rocks off Point Reyes. The contract calls for 110 frames and 109 plates on the ship's bottom and the price is $297,854.

Contract for construction of $500,000 worth of cars and other equipment for the Northern Pacific railroad has been awarded to the **Pacific Car & Foundry Co.**, of Seattle. The railroad will also build 100 box-cars at its South Tacoma shops.

The 'Griffdu', a 3500-ton steel steamship built for the **Coastwise Steamship & Barge Co.** was launched at the yard of **J. F. Duthie & Co.**, of Seattle, on September 10. This launching left the ways at Seattle shipyard bare of all steel construction.

The Hanford Iron Works, of San Bernardino, has nearly completed its new steel foundry and expects to pour the first heat about December 1. The foundry has a 2-ton Greene electric furnace. Foundry equipment was furnished by **Ditty Bros., Inc.**

Steiger & Kerr, 2201 Folsom street, will erect a new foundry at some point on the peninsula between San Francisco and San Jose, and are looking for a suitable site. They plan to erect four or five steel-frame and wood buildings to cost $40,000.

M. G. Sturtevant, S. N. Williams, J. C. Hoffman, and **J. Gilbert** have taken steps to incorporate a whaling and fishing company, with headquarters at Crescent City. Their plans call for the expenditure of $1,800,000 for docks, cold-storage plants, and vessels.

The Westinghouse Electric & Manufacturing Co. has issued leaflet No. 3485, which describes a new 500-watt, 33-volt locomotive-headlight turbine-generator unit. Photographs and line-drawings are reproduced, which show the details of construction of this unit.

The Pacific Tool & Supply Co. is furnishing all the equipment for the new factory of the National Axle Corporation at San Jose, now under construction. The total cost of the machinery is about $150,000. A number of machine-tools of special design are to be furnished.

The California Packing Corporation's plant No. 12 at Sacramento, which was burned on September 17, will be rebuilt immediately. The new structure will be a three-story steel and concrete building, and will cost, including machinery and other equipment, about $800,000.

The California Sheet Metal Works has been authorized to sell stock to Charles L. Coppage, Arnold C. Lackenbach, and A. H. Dougall, Jr., and to issue stock to Thomas M. Warren and M. Schwartz in exchange for the business and assets of the California Sheet Metal Works, a partnership.

The Hutchinson Lumber Co. has awarded a contract for the construction of the first unit of its logging railroad, from Bidwell Bar to Oregon Gulch. Contract for the second unit, from Bidwell Bar to Bidwell, on the main line of the Western Pacific railroad, will be awarded shortly.

The A. M. Castle Co. will construct a steel-distributing warehouse near East Marginal way at Seattle. The building will cost $200,000 and will be equipped with two traveling cranes of 80-ft. span. It will be used as a distributing base for points in the Orient, Alaska, and the North-West.

The Link-Belt Co. is distributing a reprint of the report on the steel strike by Charles Piez, president of the company, appearing in a recent issue of 'The Independent'. Copies of the report may be obtained from the executive offices of the company, 910 South Michigan avenue, Chicago.

Operations have commenced on the first unit of the projected Southern Pacific ship and rail terminal on the estuary of Channel street between Third and Fourth streets. Vessels of the deepest draft will be able to use the terminal after it has been dredged and widened for a distance of 300 feet.

The Plant Rubber & Asbestos Works has bought the factory and business of the **Merle Magnesia Manufacturing Co.**, of Redwood City. The Redwood City plant will be enlarged and the output of magnesia, carbonate of magnesia, and 85% magnesia pipe and boiler coverings will be considerably increased.

The National Refrigerator Co., of Los Angeles, has been incorporated with an authorized capitalization of $1,500,000. A factory for making refrigerators and other cooling-apparatus will be established. George W. Brown is president, J. J. O'Rourke, vice-president, and H. J. O'Rourke, secretary and treasurer.

T. R. Ditty, of **Ditty Bros., Inc.**, left San Francisco September 28 to attend the convention of the American Foundrymen's Association at Columbus. He will be gone about three weeks. Besides attending the convention he will visit a number of foundry-equipment manufacturers and progressive foundries in the East.

The Metals & Chemical Extraction Corporation has completed a lithopone works at its plant at 766 50th avenue, Oakland. The lithopone plant, the only one west of the Mississippi river, has a capacity of 20 tons daily. Sulphuric acid, graphite compounds, and various barium products are being manufactured by the company.

The Hall-Scott Motor Car Co. has recently received from the Government a Fokker 'battle-plane' for experimental and research purposes. A Hall-Scott 200-hp. engine has been substituted for the Mercedes engine with which it was originally equipped. This aeroplane recently flew from Berkeley to Los Angeles in 3 hours and 50 minutes.

The Graf-Ford Co., of Los Angeles, has been granted permission to issue 150,000 shares of common stock to Eugene H. Grafton in consideration of the transfer to the company of a certain invention, and to sell 50,000 shares of common and 50,000 shares of preferred stock. The company was organized principally to manufacture and market a self-oiling hub.

The first unit of the new plant of **E. M. Smith & Co.**, of Los Angeles, which is being erected at Downey is nearing completion. It will be devoted entirely to the manufacture of asbestos brake-linings and asbestos cloth, and is said to be the only plant of the kind west of Philadelphia. The total estimated cost of the first unit is $250,000 and of the entire plant $400,000.

The California Die Casting Co. will have its new plant at 881 33d street, Oakland, in operation about October 10. The equipment includes two die-casting machines, together with the necessary auxiliary apparatus. The entire plant cost $45,000. The company is composed of C. C. Vogelsong, T. S. Elston, and F. Fink, of the Bay district, H. G. Hoffine, of Los Angeles, and E. L. Fletcher, of Salt Lake City.

The Llewellyn Iron Works has completed its new foundry building at its Los Angeles plant and is now installing the equipment. The building is 166 by 350 ft. The main bay has a 60-ton crane and a 30-ton crane running under it. The side bay is served by a 10-ton Whiting crane, furnished by Ditty Bros, Inc. The foundry will have a capacity of 100 tons per day.

The Main Belting Co., manufacturers of 'Leviathan' and 'Anaconda' belting, are issuing 'Conveyor Problems and their Solution', which they describe as "a practical consideration of accepted conveying-practice as developed by engineers of

Generated on 2024-09-30 02:08 GMT / https://hdl.handle.net/2027/uiug.30112007837690
Public Domain, Google-digitized / http://www.hathitrust.org/access_use#pd-google
Digitized by Google
Original from UNIVERSITY OF ILLINOIS AT URBANA-CHAMPAIGN

authority, illustrated by notable examples of scientific belt-conveying". The illustrations are good and the examples of typical arrangement are plentiful. The booklet should be both interesting and useful to those who have conveyor problems requiring solution.

The 'Palo Alto', one of the two concrete tank-steamers built at the yard on the Oakland estuary, has been sold to the American Fuel Oil Co. for $110 per deadweight ton. Two other bids were received for this ship. Only one bid was received for the sister ship, the 'Peralta', and as this was about half the bid received for the 'Palo Alto', it was rejected and new bids will be received at a later date.

Contract for construction of a 6500-ton motorship for general cargo purposes for the **Alaska Steamship Co.** has been awarded to the **Todd Drydock & Construction Co.** There will be two six-cylinder four-cycle McIntosh-Seymour Diesel engines, each developing 1200 indicated horse-power at 140 r.p.m. All auxiliaries will be electrically driven, current being generated by two 100-hp. McIntosh-Seymour engines.

The U. S. Forest Service has recently ordered several 200-hp. **Hall-Scott** aviation engines for use in De Haviland aeroplanes for forest-patrol work. The Postoffice Department has also ordered a carload of these engines, also for use in De Haviland aeroplanes for the mail service. In each case, two 200-hp. Hall-Scott engines are substituted for the 400-hp. 'Liberty 12' engine with which the aeroplane was originally equipped.

Neil Neville, of the Philadelphia office of the **Electric Furnace Construction Co.,** is in Vancouver, British Columbia, superintending the installation of a one-ton Greaves-Etchells furnace at the plant of the Vancouver Engineering Works, Ltd. Following the completion of this work, Mr. Neville will make a tour of the principal Pacific Coast centres in company with A. S. Lindstrom, Western representative for the Electric Furnace Construction Company.

The General Electric Co. has issued bulletins No. 48704-A, 'G-E Insulating Compounds', No. 48715, 'G-E Insulating Fabrics', No. 49400, 'The Hewlett Link Insulator', No. 41311, 'Synchronous Condensers', No. 46042, 'Type H-2 Demand Meter', No. 46209, 'Thomson Direct-Current Astatic Watthour Meters', No. 46017, 'Direct-Current Instruments, Types D-7 and D-8', No. 46028, 'Temperature Indicator', and No. 47001-A, 'Standard Unit Switchboard Panels'.

A. S. Lindstrom, 519 California street, has established a branch office at 121 Second street, Los Angeles, in charge of J. R. Davies. Mr. Davies will represent in the southern territory the same lines that Mr. Lindstrom handles, including the Electric Furnace Construction Co., manufacturing the Greaves-Etchells furnace; the Adams-Bagnall Electric Co., industrial lighting; the Ohio Electric & Controller Co., lifting magnets; and the Fischer Machine Tool Co., machine-tools.

The Colby Steel & Engineering Co., of Seattle, and the **Star Iron Works,** of Tacoma, have been consolidated under the name of the **Colby-Star Manufacturing Co.,** with factory at Tacoma. The company will manufacture cranes, monorail systems, structural steel, rods, bolts, heavy forgings, road graders, and industrial trucks and trailers. The officers are: C. M. Hansen, president, R. N. Allen, secretary, and Lindsay B. Campbell, manager of structural-steel department.

The California Metal Trades Association has moved its employment offices to 41 Drumm street. The new offices occupy the entire building, and the enlarged quarters have permitted the making of a number of improvements that have been under consideration for some time. Besides the actual employment offices, a reading-room and other facilities have been provided, which make the building practically a clubhouse. Between 1500 and 2000 men per month are being placed. While the shipyards and some of the other large concerns continue to maintain their own employment offices, all these companies hire many of their men, particularly for special jobs, through the Association office, while most of the smaller shops hire all their men in this way.

Construction of the **Pacific Coast Steel Co.** plant at Willbridge, Oregon, has been resumed. This work was started in January 1919, but was discontinued about the time of the Armistice at which time the main furnace-building was practically completed and the foundation for the rolling-mill laid, the total amount expended being $400,000. The present activities are limited to the construction of a trestle, and officials of the company have stated that this does not necessarily indicate the early completion of the plant.

The revised edition of catalogue No. 380 of the **Link-Belt Co.** is ready for distribution. This 96-page book covers the Link-Belt line of standardized monorail electric hoists as well as overhead electric traveling cranes in capacities of ½ to 3 tons inclusive. The numerous photographs of machines in operation indicate that foundries, machine-shops, and factories of every description are coming to a greater realization of the need for installing labor-saving, cost-reducing, production-increasing equipment of this character. Copies can be had by addressing the Link-Belt Co., 910 South Michigan avenue, Chicago, or any branch office of the company.

The new 'Eveready' instruction book, put out recently by the Oxweld Acetylene Co., 3640 Jasper place, Chicago, is one of the best treatises on every-day oxy-acetylene welding and cutting that has thus far been produced. Not since the company issued its 'Oxweld Manual', which has gone through two complete editions, has Oxweld experienced such spirited demand for a trade publication. The little volume is a compact and handy brochure (5 by 8 in.) containing 55 printed pages, inclusive of illustrations and drawings. It covers the field of everyday applications in a remarkably clear and concise treatment and in language that is easy for the beginner to grasp, and it is at the same time invaluable to the experienced welder and cutter. The booklet is distributed free.

Announcement is made of the consolidation of two non-competing foundry equipment manufacturing companies, the **Whiting Foundry Equipment Co.** of Harvey, Illinois, and the **American Foundry Equipment Co.** of New York City. The new organization will be known as the **Whiting Corporation** and will be capitalized at $5,000,000. J. H. Whiting, president of the Whiting Foundry Equipment Co., becomes chairman of the board, and V. E. Minich, president of the American Foundry Equipment Co. and of the Foundry Equipment Manufacturers Association, will be president. As the lines of manufacture of the component companies do not overlap present manufacturing facilities will be maintained. The Whiting plant at Harvey will retain the manufacture of cranes, cupolas, hoists, tumbling-mills, core-ovens, and all other items of the established Whiting line, together with sand-blast equipment and dust arresters. Sand-cutting machines, charging-trucks, core-machines, and steel flasks will comprise the principal output of the new 'American' plant at 2935 West 47th street, Chicago, under the direction of E. A. Rich, Jr. Molding-machines, jolts, flask specialties, and pattern-mounting materials will continue to be manufactured at the York, Pennsylvania, plant of the American company in charge of R. S. Buch. The plans include maintaining and enlarging the present offices of the American Foundry Equipment Co., 366 Madison avenue, New York, as the Eastern sales and export office of the combined lines. Though production is heavy in all the lines of the respective companies much development work is in progress. It is believed that important economies in manufacture and distribution will be attained through this combination of experienced manufacturing and selling organizations.

Generated on 2024-09-30 02:11 GMT / https://hdl.handle.net/2027/uiug.30112007837690
Public Domain, Google-digitized / http://www.hathitrust.org/access_use#pd-google
Digitized by Google
Original from UNIVERSITY OF ILLINOIS AT URBANA-CHAMPAIGN